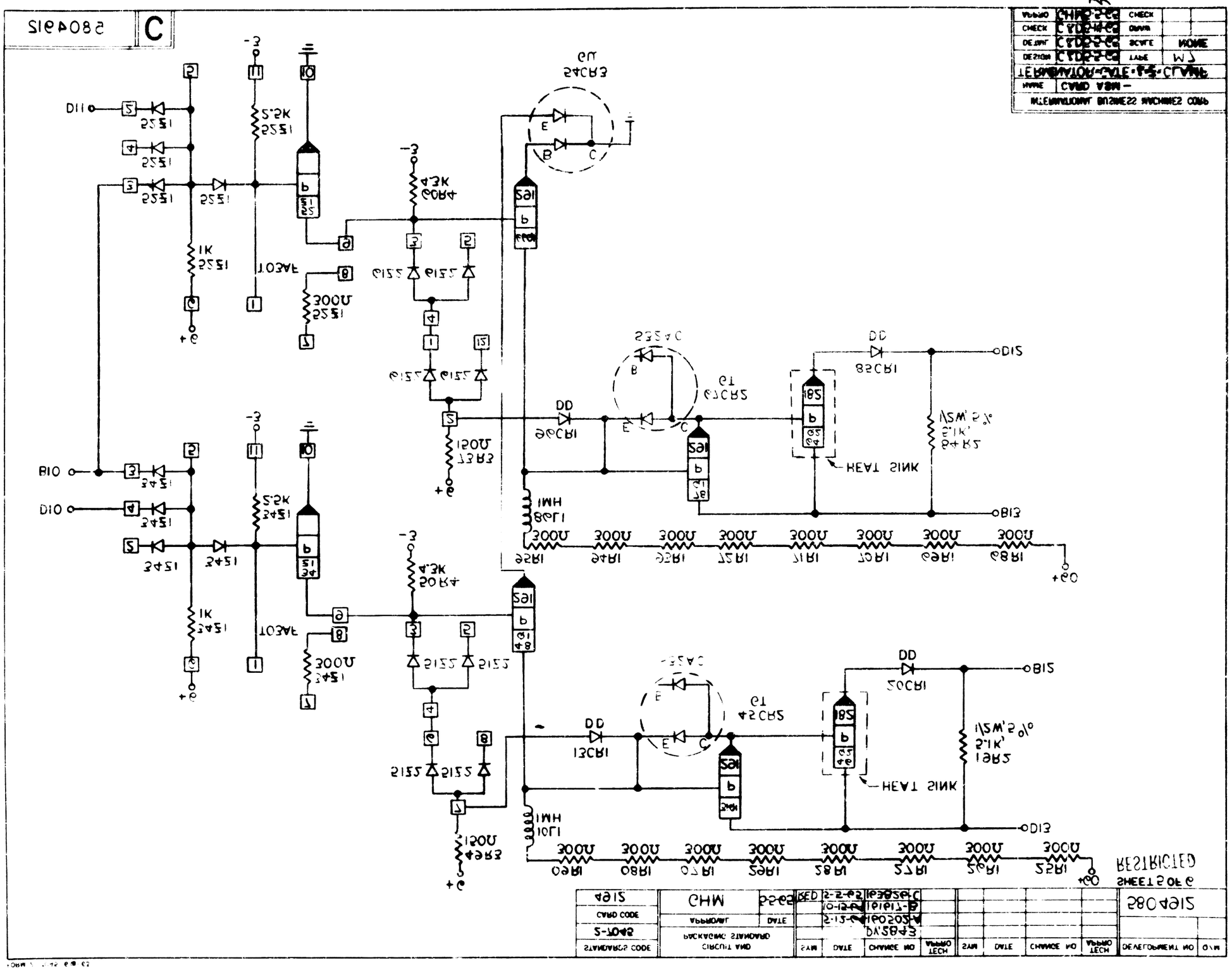
C
INTERNATIONAL BUSINESS MACHINES CORP.
CARD MAN
NONE
CHIP
CIRCUIT AND
PACKAGING STANDARD
STANDARD CODE
CARD CODE
HEAT SINK
RESTRICTED
SHEET 2 OF 2