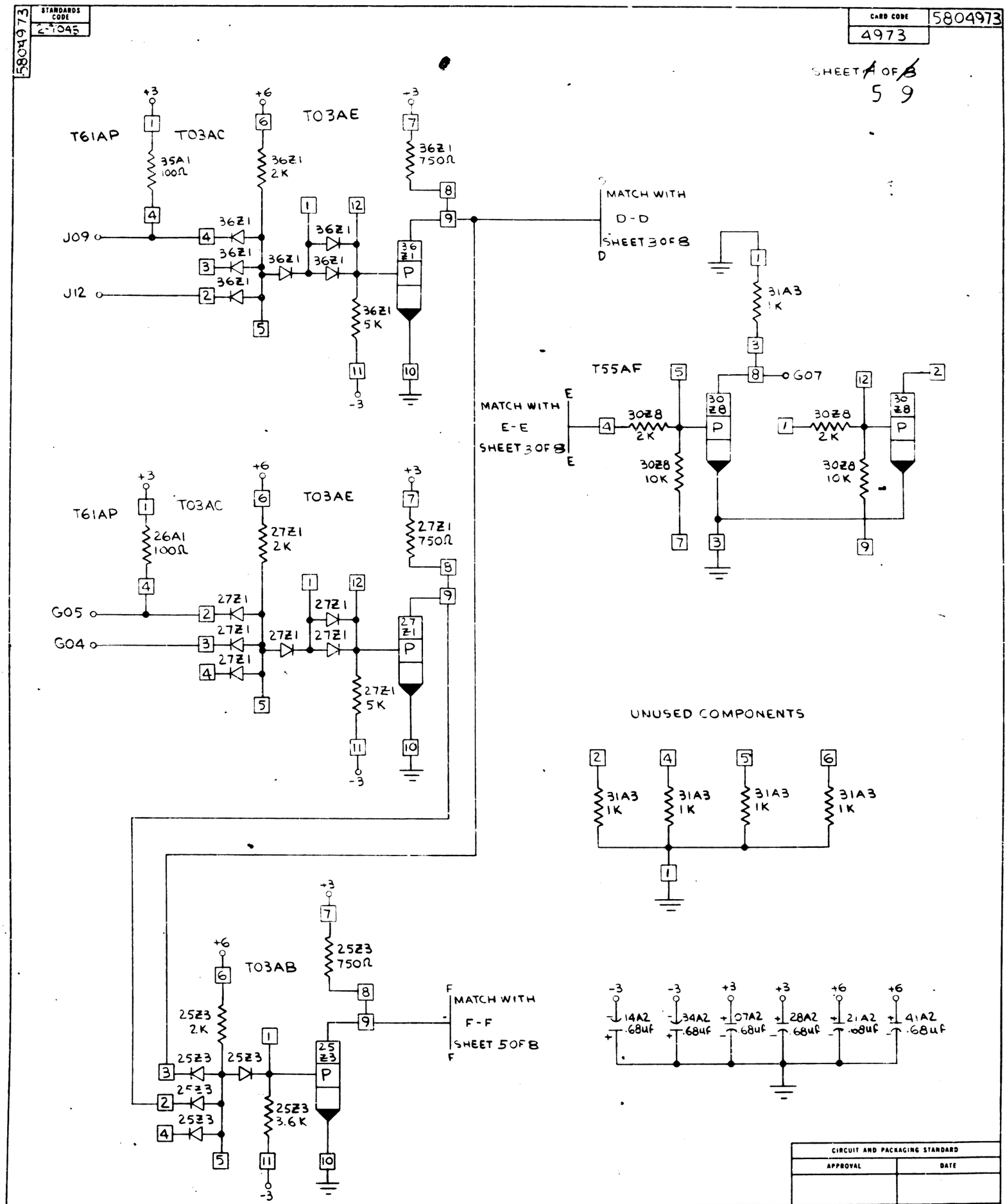
5804973
STANDARDS CODE
2-1095
CARD CODE
4973
5804973
SHEET 4 OF 8
5 9
T61AP
T03AC
T03AE
35A1 100Ω
36Z1 2K
36Z1 750Ω
36Z1 5K
J09
J12
MATCH WITH
D-D
SHEET 3 OF 8
31A3 1K
T55AF
G07
MATCH WITH
E-E
SHEET 3 OF 8
30Z8 2K
30Z8 10K
T61AP
T03AC
T03AE
26A1 100Ω
27Z1 2K
27Z1 750Ω
27Z1 5K
G05
G04
UNUSED COMPONENTS
31A3 1K
T03AB
25Z3 750Ω
25Z3 2K
25Z3 3.6K
MATCH WITH
F-F
SHEET 5 OF 8
14A2 .68uf
34A2 .68uf
07A2 .68uf
28A2 .68uf
21A2 .68uf
41A2 .68uf
CIRCUIT AND PACKAGING STANDARD
APPROVAL
DATE
INTERNATIONAL BUSINESS MACHINES CORP.
NAME CARD ASM- CHECK AND CONTROLS
DESIGN N.I.S. 8-3-64
DETAIL N.I.S. 8-3-64
CHECK 8-28-64
APPRO 8-3-64
MODEL 2361 A
SCALE
DRAW N.I.S. 8-3-64
CHECK
DATE
CHANGE NO.
APPROVAL
DEVELOPMENT NO.
8-28-64 DEV 3976
2-23-65 163105
5804973
C