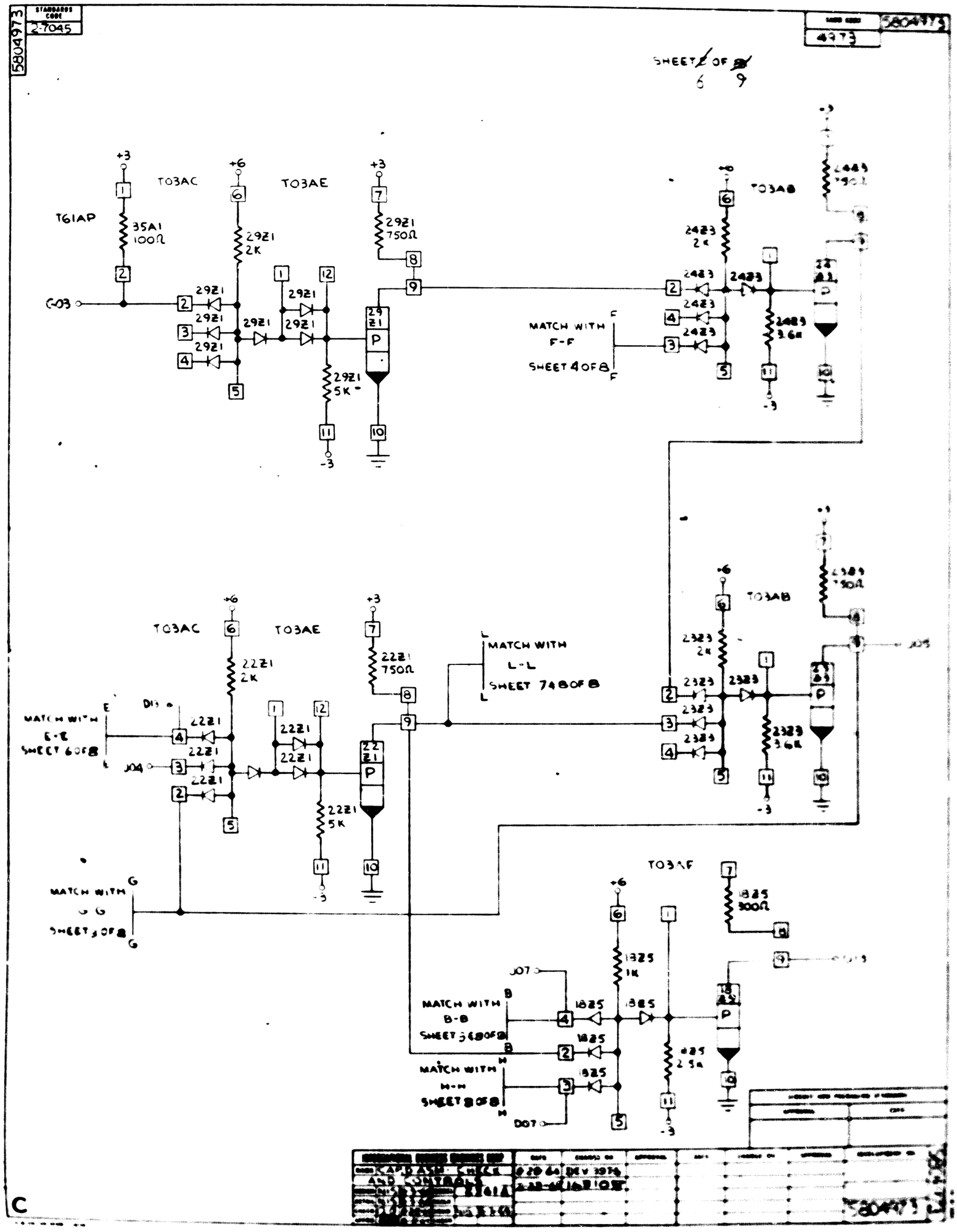
5804973
STANDARDS CODE
2-7045
4973
SHEET 6 OF 9
T61AP
T03AC
T03AE
T03AB
T03AF
+3
+6
-3
35A1
100Ω
29Z1
2K
29Z1
750Ω
29Z1
5K
2423
2K
2483
3.6K
2483
750Ω
22Z1
2K
22Z1
750Ω
22Z1
5K
2323
2K
2323
3.6K
2389
750Ω
1825
300Ω
1325
1K
1825
2.5K
C03
J04
J05
J07
D07
MATCH WITH
F-F
SHEET 4 OF 8
MATCH WITH
L-L
SHEET 7 & 8 OF 8
MATCH WITH
E-E
SHEET 6 OF 8
MATCH WITH
G-G
SHEET 5 OF 8
MATCH WITH
B-B
SHEET 3 & 8 OF 8
MATCH WITH
H-H
SHEET 8 OF 8
C