STANDARDS CODE 2-7045

5804973

CARD CODE 4973 5804973

SHEET 6 OF 8 (7 9)

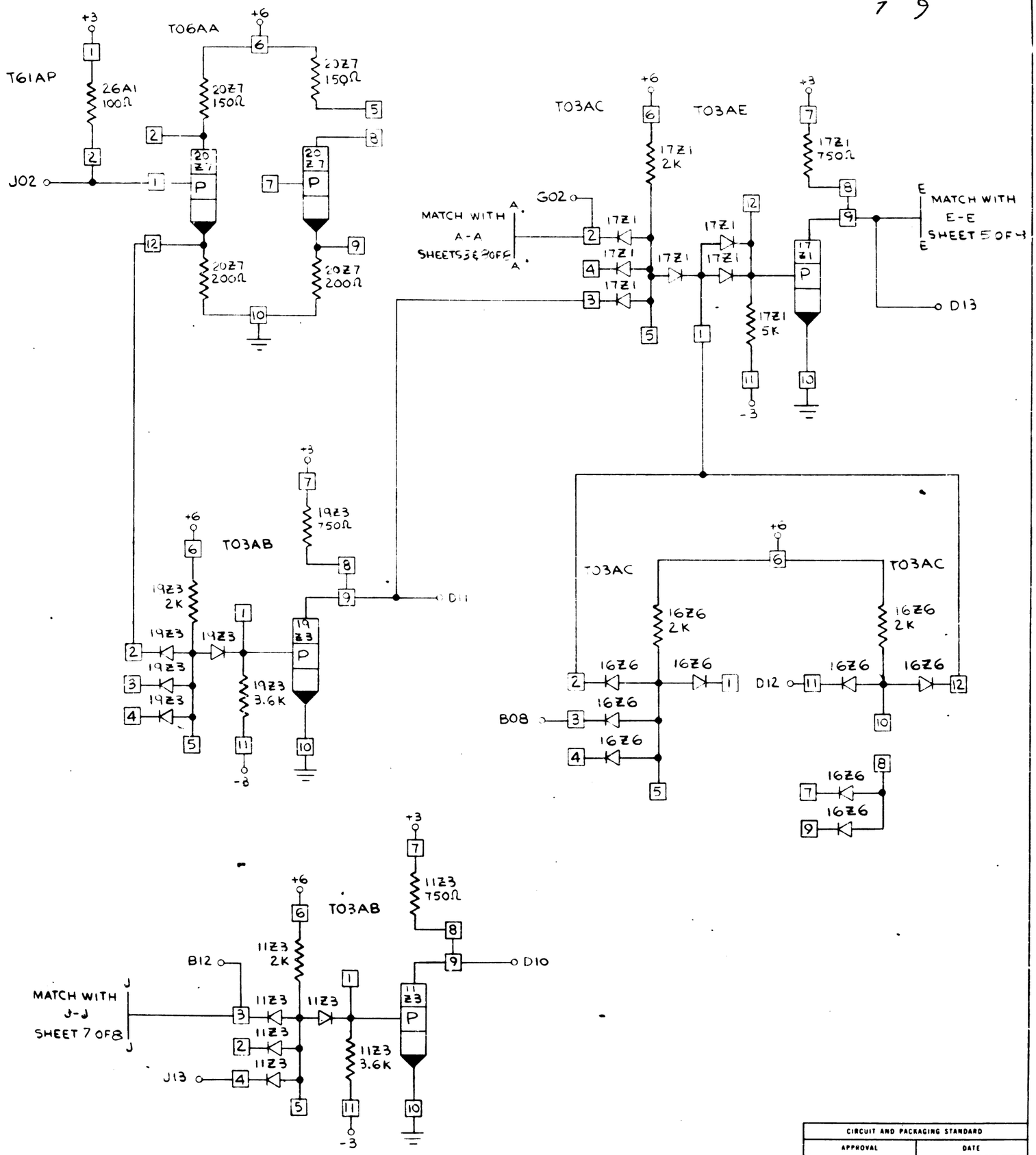

CIRCUIT AND PACKAGING STANDARD	
APPROVAL	DATE

INTERNATIONAL BUSINESS MACHINES CORP.					DATE	CHANGE NO	APPROVAL	DATE	CHANGE NO	APPROVAL	DEVELOPMENT NO.
NAME	CARD ASM-CHECK AND CONTROLS				8-28-64	DEV 3976					
DESIGN	N.I.S.	8-3-64	MODEL	2361							
DETAIL	N.I.S.	8-3-64	SCALE								
CHECK		8-28-64	DRAW	N.I.S.	8-3-64						5804973
APPRO		8-31-64	CHECK								

C

5804973