FORM 2-7045-6 (11-63)

STANDARDS CODE	CIRCUIT AND PACKAGING STANDARD		SYM	DATE	CHANGE NO.	TECH APPRO	SYM	DATE	CHANGE NO.	TECH APPRO	DEVELOPMENT NO.	G/M
2-7045				01-04-64	DEV 2258							
CARD CODE	APPROVAL	DATE		11-27-64	162046							
4923	GHM	5-14-65		6-10-65	164385 B						5804923	

SHEET 6 OF 12

RESTRICTED

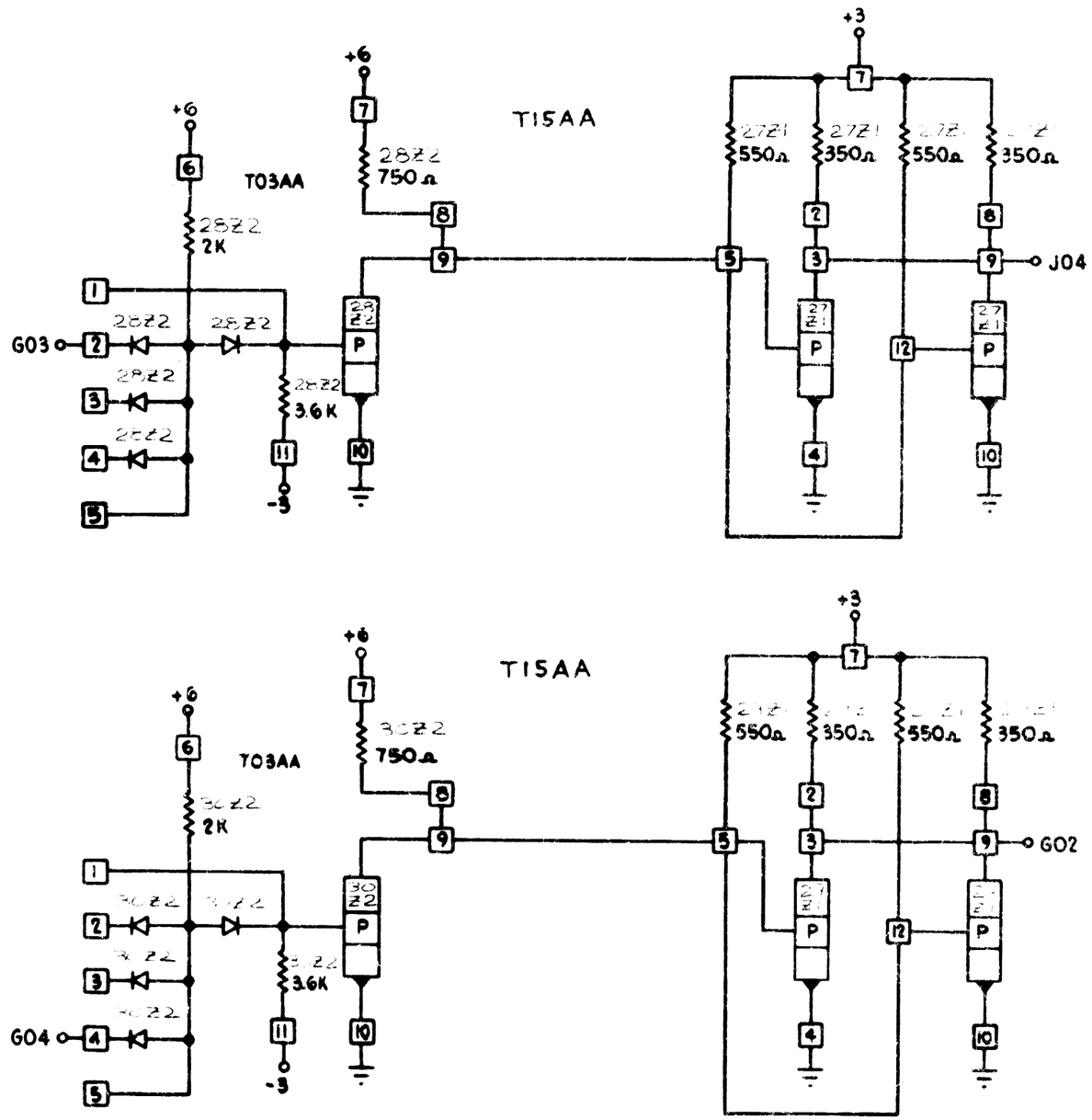

INTERNATIONAL BUSINESS MACHINES CORP				
NAME	CARD ASM - MAR TO DECODING DRIVERS I			
DESIGN	GJK	6-10-63	TYPE	361
DETAIL	GJK	6-13-63	SCALE	NONE
CHECK	JJ	7-22-63	DRAWN	GT 7-1-63
APPRO			CHECK	7-8-63

C 5804923