FORM 2-7045-6 (1-63)

STANDARDS CODE	CIRCUIT AND PACKAGING STANDARD		SYM	DATE	CHANGE NO.	TECH APPRO	SYM	DATE	CHANGE NO.	TECH APPRO	DEVELOPMENT NO.	O/M
2-7045				[redacted]	[redacted]							
CARD CODE	APPROVAL	DATE		11-27-64	182046							
4923	GHM	5-14-65		5-10-65	1C4385B						5804923	

SHEET 4 OF 12

RESTRICTED

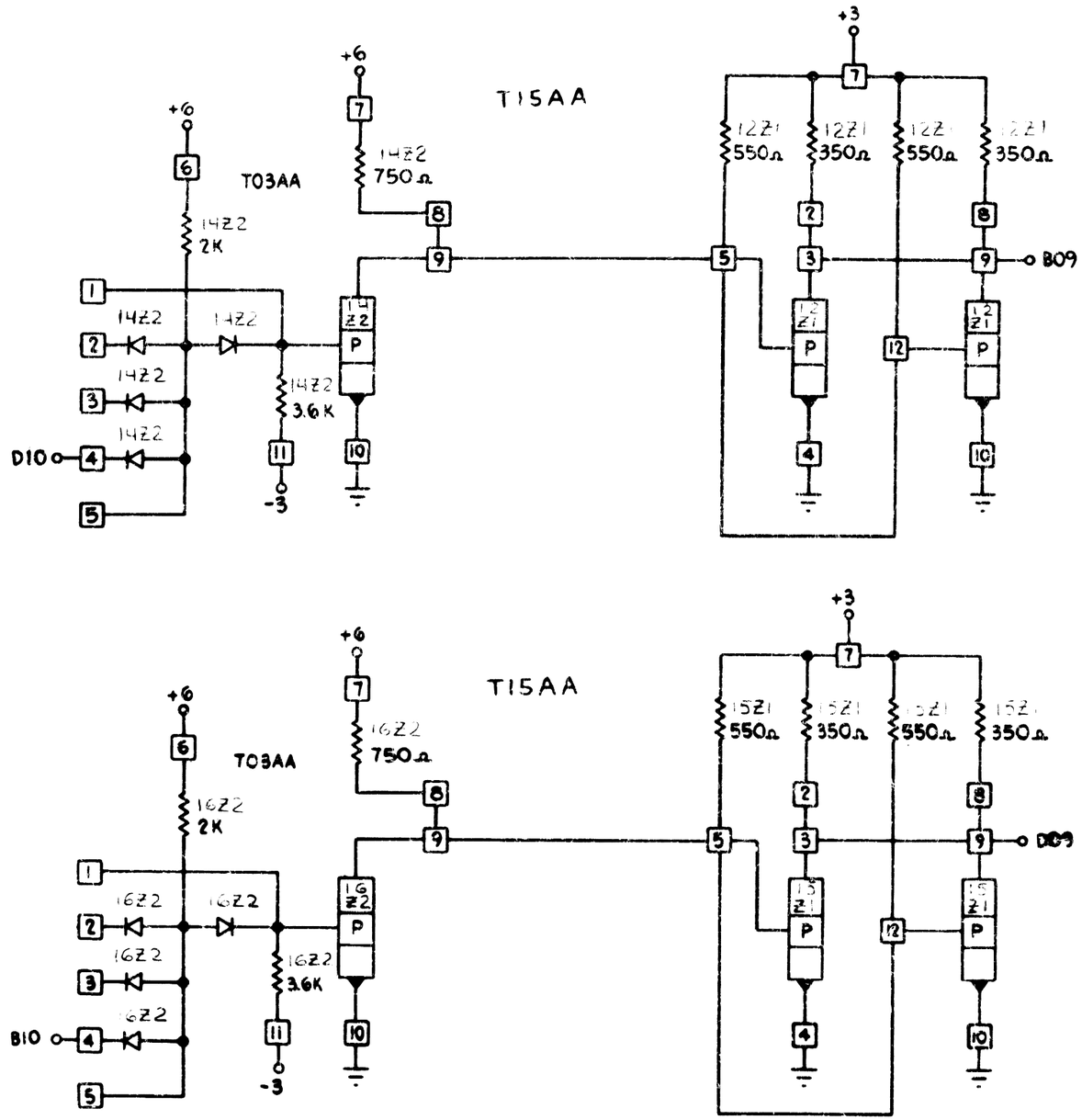

INTERNATIONAL BUSINESS MACHINES CORP					
NAME	CARD ASM-MAR TO DECODING DRIVERS I				
DESIGN	GJK	6-10-63	TYPE	23 01	
DETAIL	GJK	6-13-63	SCALE	NONE	
CHECK	J.J	7-22-63	DRAW	GY	7-1-63
APPRO			CHECK		7-26-63

C 5804923