TRANSISTOR CODE	CIRCUIT AND PACKAGED TERMINAL		SYM	DATE	CHANGE NO		SYM	DATE	CHANGE NO		DEVELOPMENT NO	S/N
2-7045	APPROVAL	DATE										
CARD CODE												
4-926											5804926	

SHEET 4 OF 5

RESTRICTED

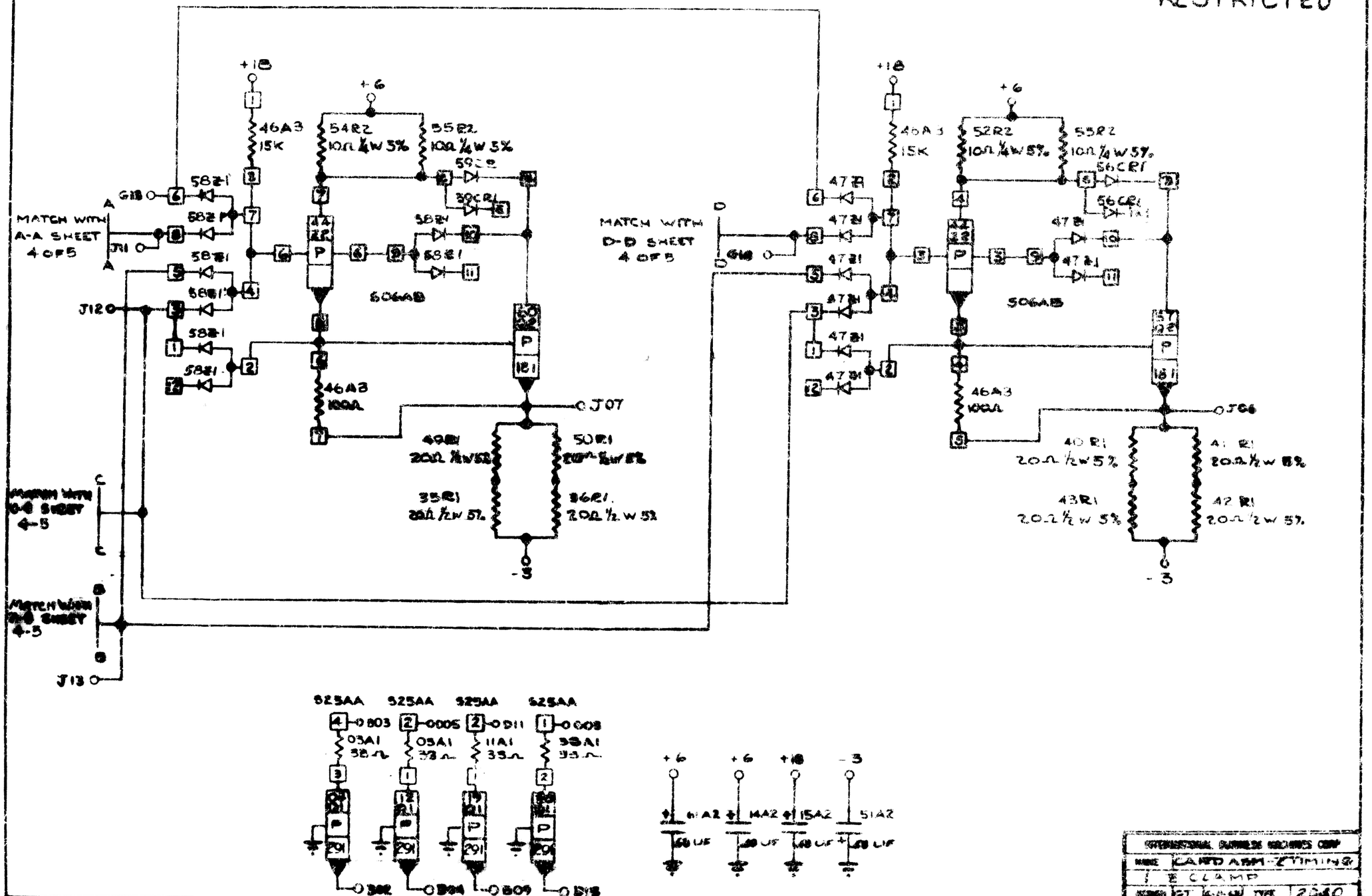

INTERNATIONAL BUSINESS MACHINES CORP				
NAME	CARD ASM - TIMING & CLAMP			
DRAWN	GT	6-11-63	TYPE	2040
DETAIL	PNC	6-11-63	SCALE	NONE
CHECK				
APPROVED				

5804926 C