STANDARD CODE	CIRCUIT AND PACKAGING STANDARD												
2-7048					1567								
CARD CODE	APPROVAL	DATE											
4930	GHM	4-1-65											5804930

SHEET 6 OF 11

RESTRICTED

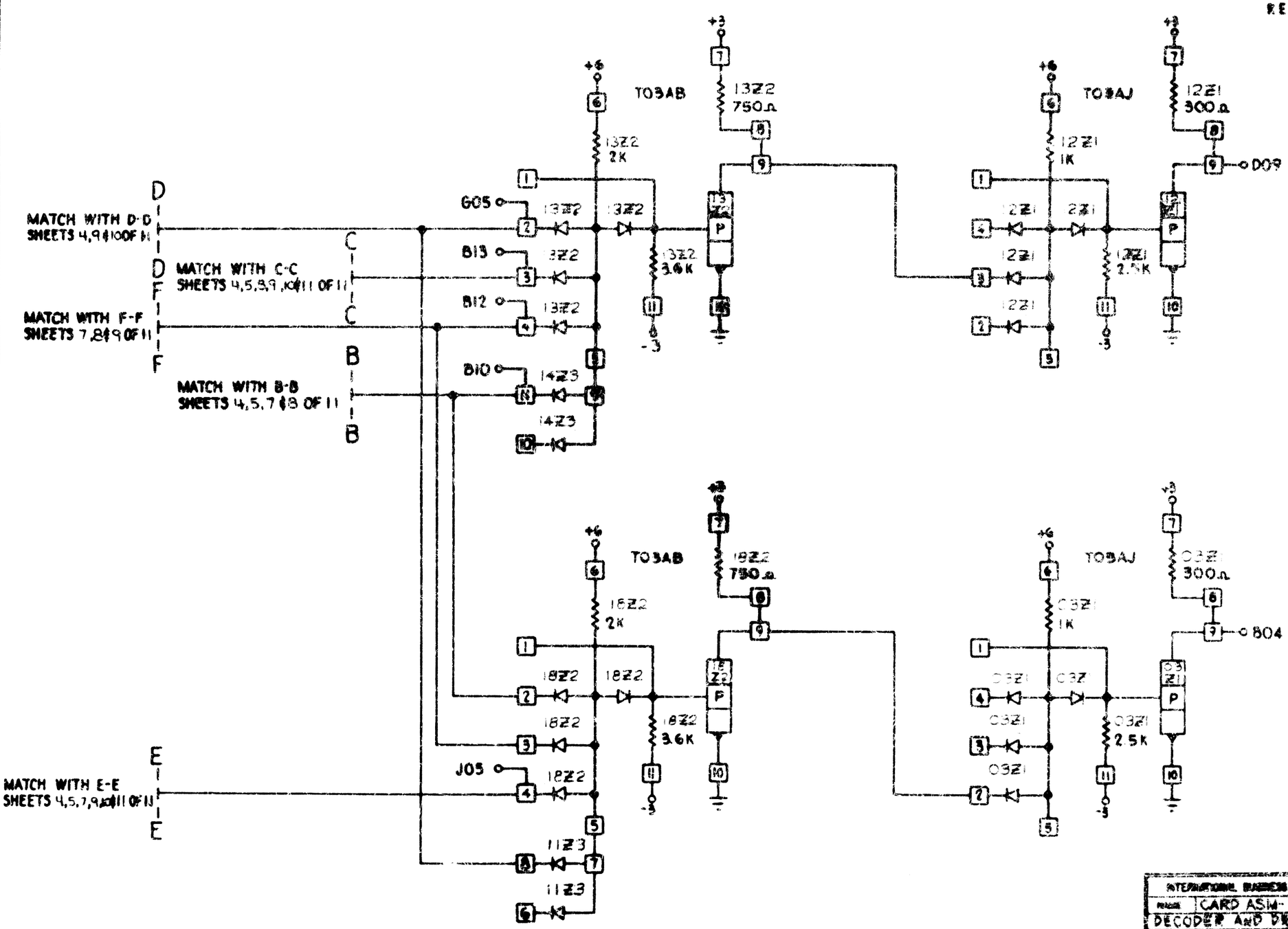

INTERNATIONAL BUSINESS MACHINES CORP				
TITLE	CARD ASM-FOUR BIT DECODER AND DRIVERS			
DESIGNED			TYPE	2304
DETAILED			SCALE	NONE
CHECKED			DRAWN	GT
APPROVED			CHECKED	

C 5804930