STANDARD CODE	CIRCUIT AND PACKAGING STANDARD		SYM	DATE	CHANGE NO	TECH APPROV	SYM	DATE	CHANGE NO	TECH APPROV	DEVELOPMENT NO.	9/11
2-7046	APPROVAL	DATE			1567							
CARD CODE	GHM	4/65		08-17-69	08M20V8						5804930	
4930				11-26-66	162048							
				7-2-65	65772B							

SHEET 7 OF 11

RESTRICTED

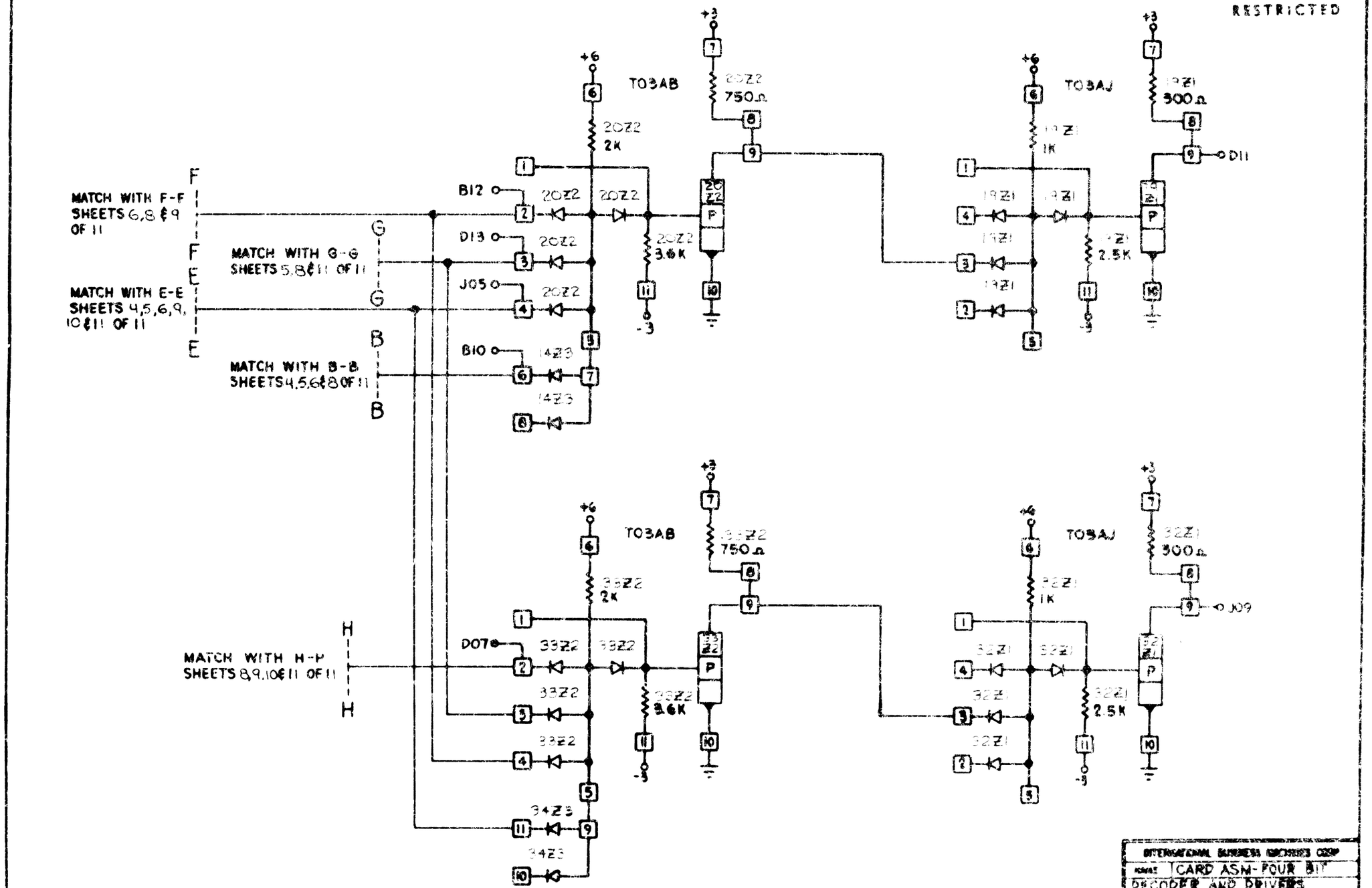

INTERNATIONAL BUSINESS MACHINES CORP			
NAME	CARD ASM-FOUR BIT DECODER AND DRIVERS		
DESIGN		TYPE	
DETAIL		SCALE	NONE
CHECK		DRAWN	
APPROV		CHECK	

C 5804930