STANDARDS CODE	CIRCUIT AND PACKAGING STANDARD		SYM	DATE	CHANGE NO.		SYM	DATE	CHANGE NO.		DEVELOPMENT NO.	S/E
2-7046	APPROVAL	DATE			1567							
CARD CODE				2-10-67	1682048							
4930	GHM	4-1-65		11-26-64	1637739						5804930	

SHEET 8 OF 11

RESTRICTED

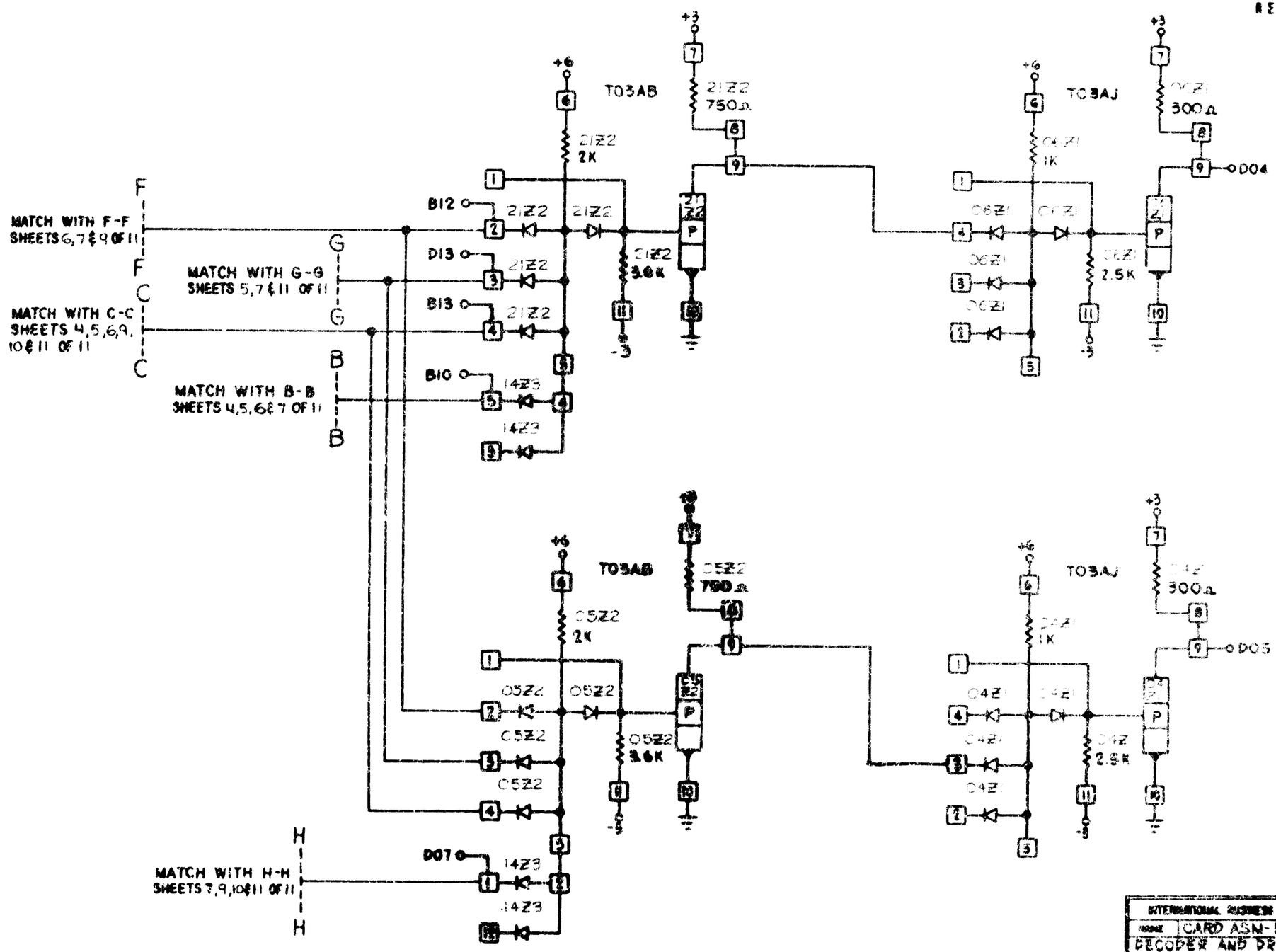

INTERNATIONAL BUSINESS MACHINES CORP

NAME	CARD ASM-FOUR BIT DECODER AND DRIVERS		
DESIGN		TYPE	
DETAIL		SIZE	
CHECK		STATUS	
APPRO			

C 5804930