STANDARD CODE	CIRCUIT AND PACKAGING STANDARD		SYM	DATE	CHANGE NO	TECH APPRO	SYM	DATE	CHANGE NO	TECH APPRO	DEVELOPMENT NO	G/N
2-7046					1567							
CARD CODE	APPROVAL	DATE		11-26-64	162048							
4930	GHM	4-1-65		7-2-63	169728						5804930	

SHEET 10 OF 11

RESTRICTED

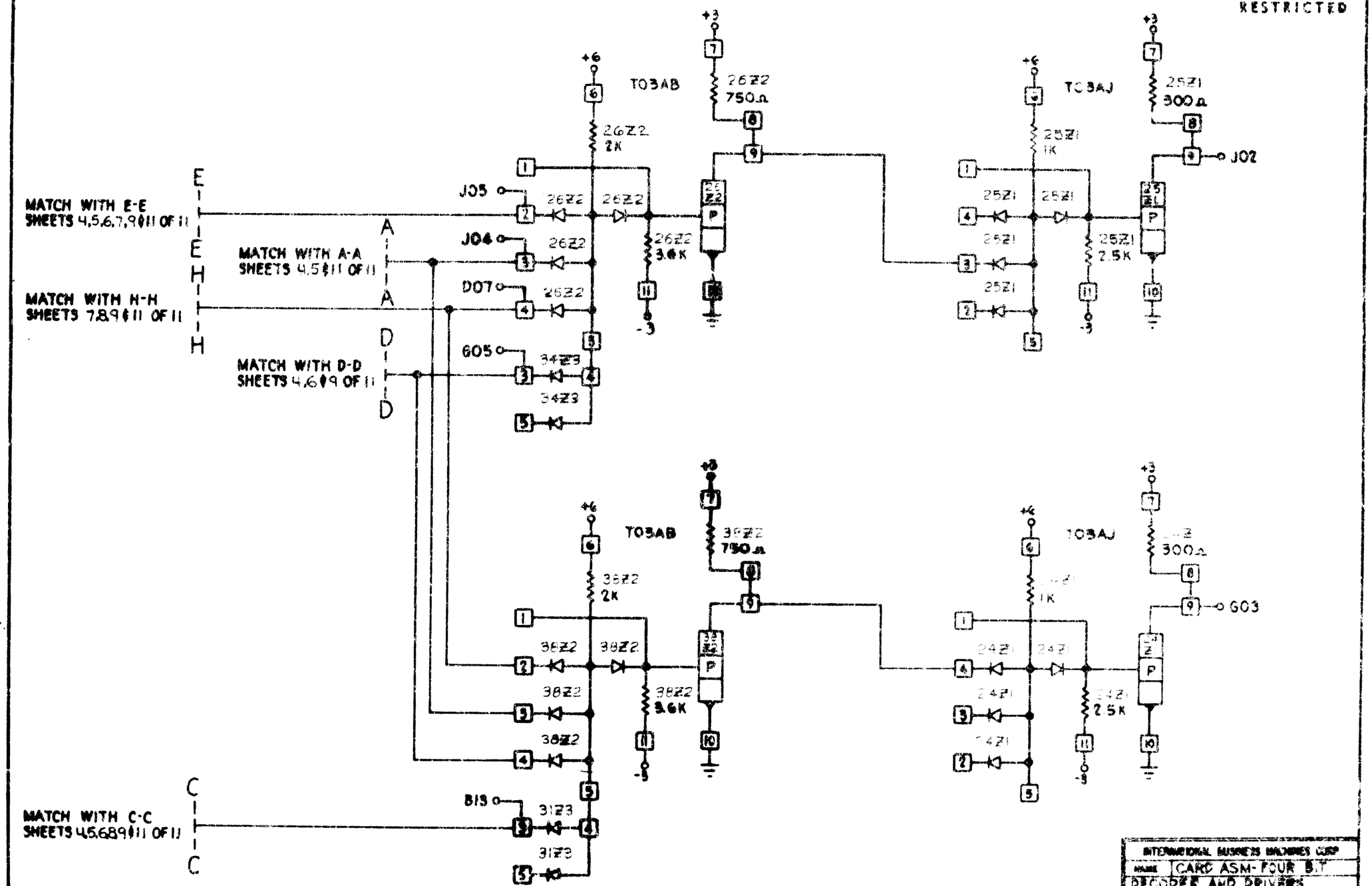

INTERNATIONAL BUSINESS MACHINES CORP				
NAME	CARD ASM-FOUR BIT DECODER AND DRIVERS			
DESIGN	G.C.M.	6-2-65	TYPE	2021
DETAIL	G.C.M.	6-2-65	SCALE	NONE
CHECK		7/2/65	DRAW	
APPRO	G.H.M.	6-1-65	CHECK	

5804930 C