DRAWING OF BIT	CIRCUIT AND PACKAGING STANDARD		SYM	DATE	CHANGE NO		SYM	DATE	CHANGE NO		DEVELOPMENT NO	6/12
2-7043					1567							
CARD CODE	APPROVAL	DATE		6-17-64	DEN 2088							
4930	GHM	4-1-65		11-26-64	162048						5804930	
				7-2-65	163772							

SHEET 11 OF 11

RESTRICTED

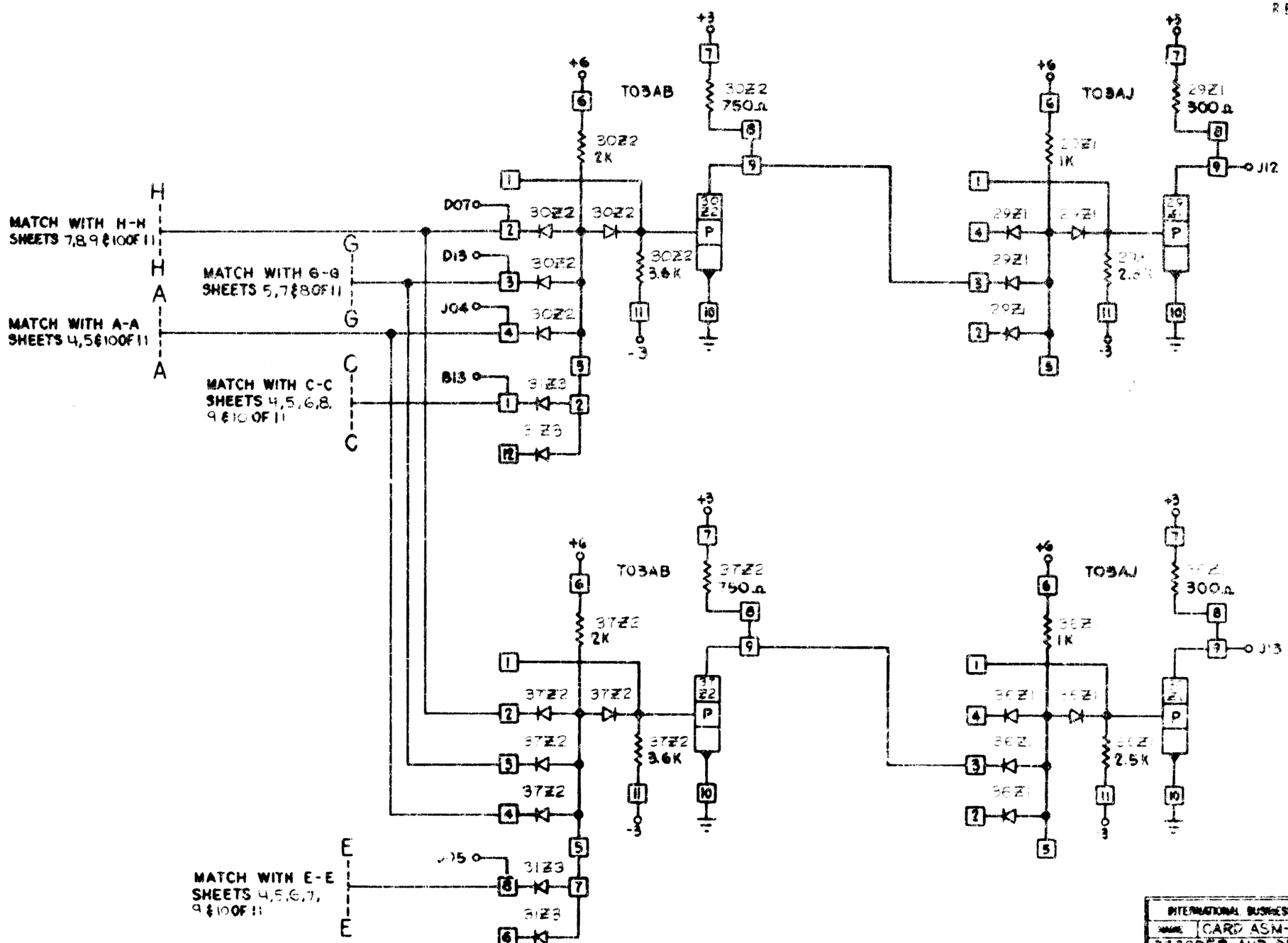

INTERNATIONAL BUSINESS MACHINES CORP				
NAME	CARD ASM-FOUR BIT DECODER AND DRIVERS			
DESIGN		6-27-63	TYPE	23Z1
DETAIL		6-27-63	SCALE	NONE
CHECK		7-31-65	DRAW	
APPRO	GHM	4-1-65	CHECK	

5804930 C