RESTRICTED

STANDARDS CODE	CIRCUIT AND PACKAGING STANDARD		SYM	DATE	CHANGE NO	TECH APPRO	SYM	DATE	CHANGE NO	TECH APPRO	DEVELOPMENT NO	Q/M
2-7046	APPROVAL	DATE									5804945	
CARD CODE												
4945												

SHEET 8 OF 8

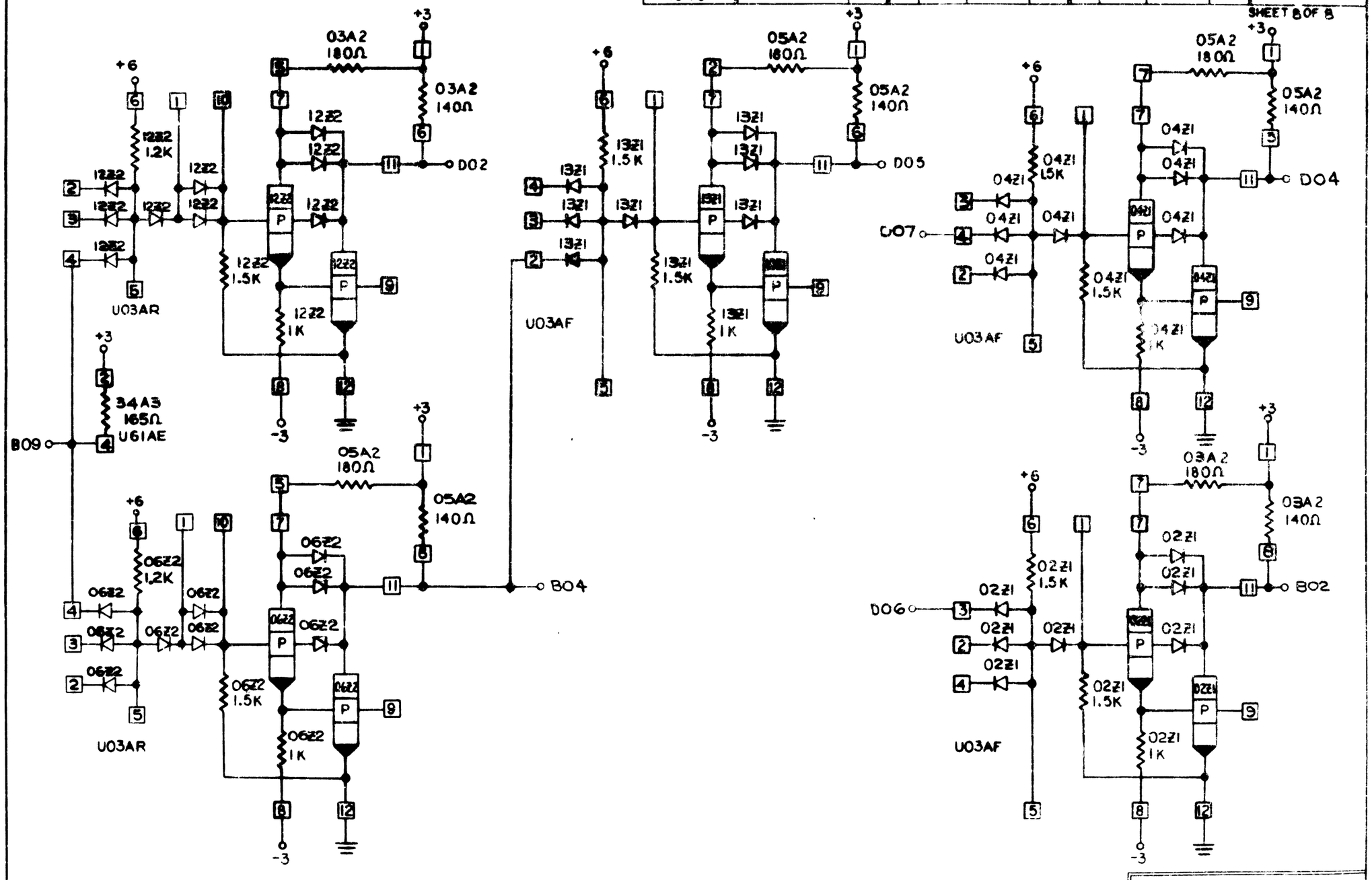

INTERNATIONAL BUSINESS MACHINES CORP				
NAME	CARD ASM ADDRESS POWERING			
DESIGN	C&D	11-27-63	TYPE	2362
DETAIL	C&D	11-29-63	SCALE	NONE
CHECK	C&D	11-30-63	DRAW	
APPRO	RBS	1-13-64	CHECK	JFM 12-13-63

C 5804945