STANDARDS CODE	CIRCUIT AND PACKAGING STANDARD		SYM	DATE	CHANGE NO	TECH APPRO	SYM	DATE	CHANGE NO	TECH APPRO	DEVELOPMENT NO	Q/M
2-7045				3-3-64	DEV 3629							
CARD CODE	APPROVAL	DATE		11-20-63	61634						5804947	
4947	GHM	4-4-64										

RESTRICTED

SHEET 5 OF 10

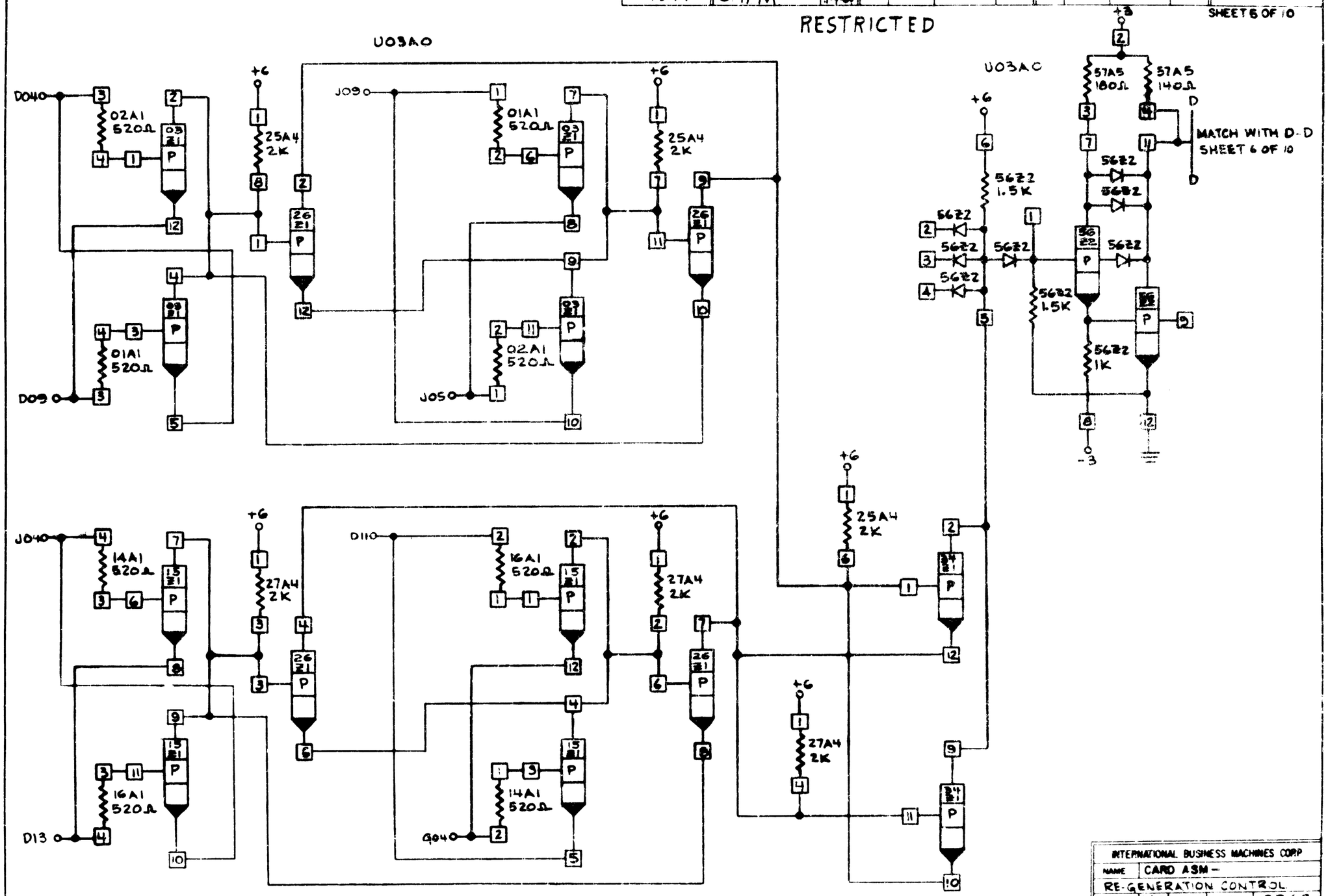

INTERNATIONAL BUSINESS MACHINES CORP				
NAME	CARD ASM —			
RE-GENERATION CONTROL				
DESIGN	C & D	3-20-64	TYPE	2362
DETAIL	C & D	3-20-64	SCALE	NONE
CHECK	C & D	3-20-64	DRAW	
APPRO	GHM	4-3-64	CHECK	OAD 4-7-64

5804947 C