FORM 2-7045-6 (1-63)

STANDARDS CODE	CIRCUIT AND PACKAGING STANDARD		SYM	DATE	CHANGE NO.	TECH APPRO	SYM	DATE	CHANGE NO.	TECH APPRO	DEVELOPMENT NO.	G/M
2-7045	APPROVAL	DATE										
CARD CODE	GHM	4-13-64		08-06-64	DEV 3853						5804948	
4948				11-25-64	161648							

RESTRICTED

SHEET 5 OF 10

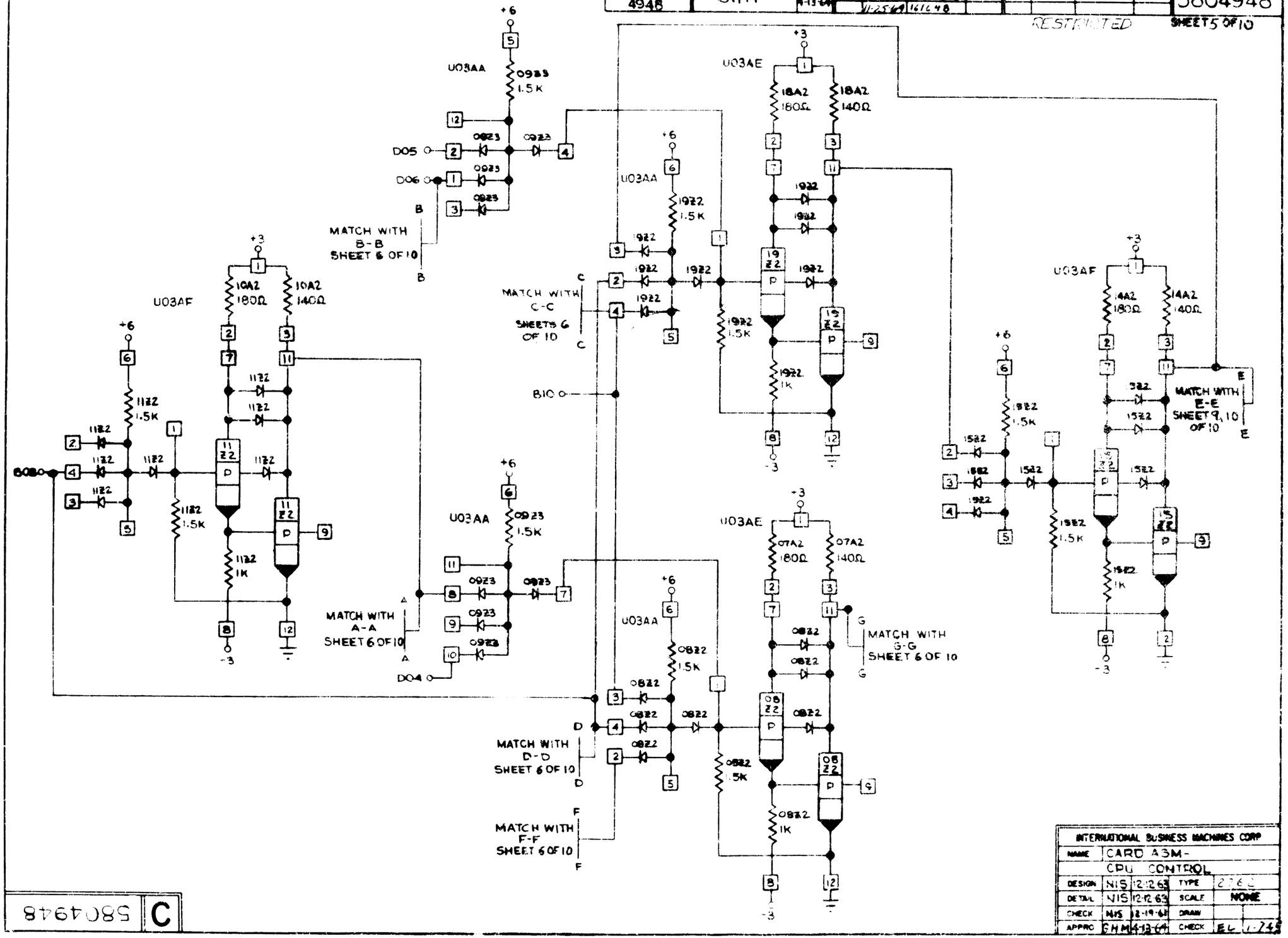

INTERNATIONAL BUSINESS MACHINES CORP				
NAME	CARD ASM- CPU CONTROL			
DESIGN	NIS	12-12-63	TYPE	2765
DETAIL	NIS	12-12-63	SCALE	NONE
CHECK	NIS	12-19-63	DRAW	
APPRO	GHM	4-13-64	CHECK	EL 1-245

C 5804948