THIS ALD HAS BEEN HAND CHECKED AGAINST THE WIRING

SHEET 01 OF 07

000 49491

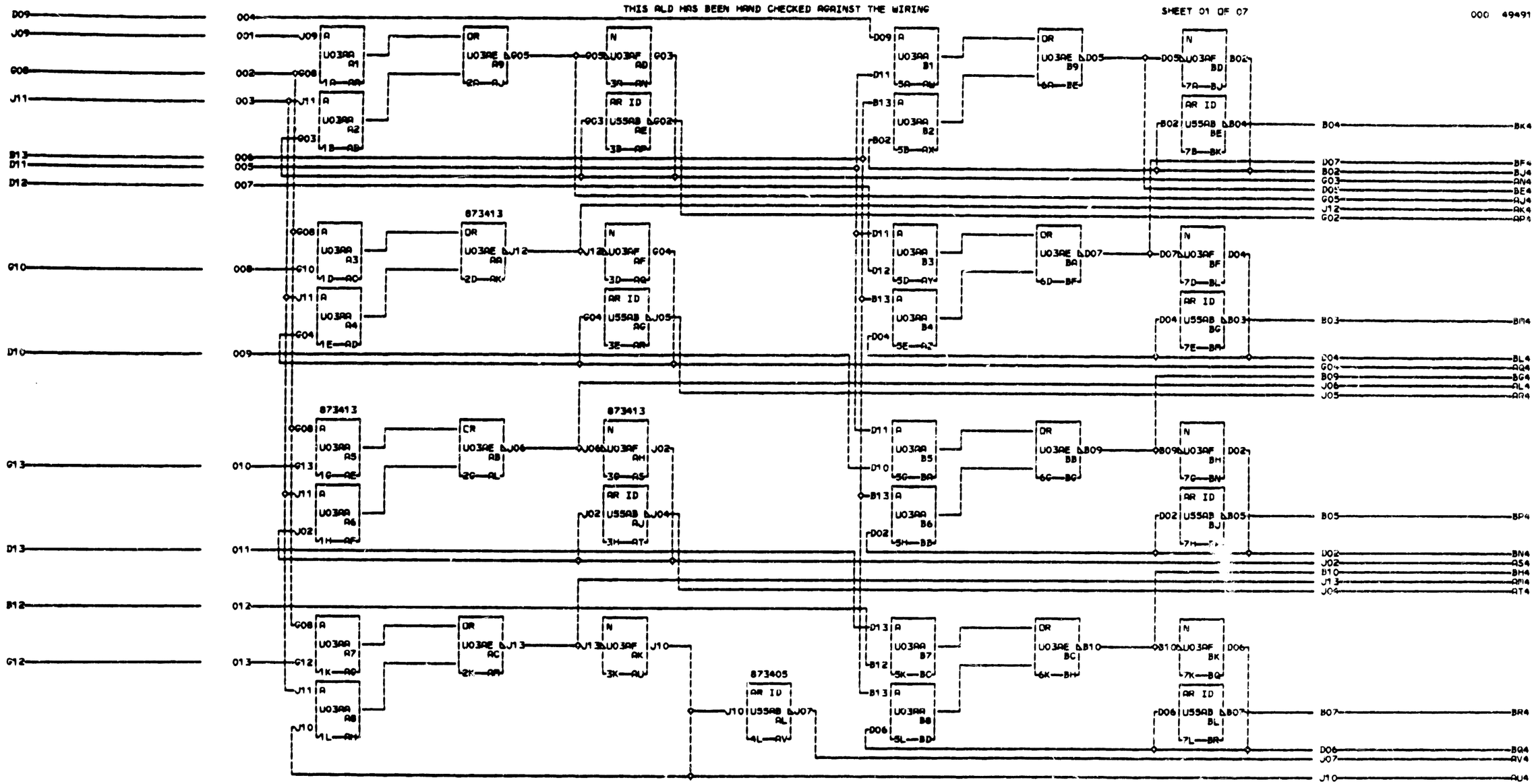

CARD SIZED 2-36 PRC U03
VOLTAGE PINS
4 +6V◇B110611 +3V◇D030J03
9 -3V◇B060606 GND◇D080J08
4 SPECIAL RESTRICTED
9
1

000

DEV3619
11-18-64 161642

RESTRICTED

MARK REGISTERS

DATE 11-16-64 MACH. ASSEMBLY 4 9 4 9 1

LUG 142 FRAME

CD PG 1 OF 1 P.No. 3804949 000

IBM CORP. PM BLK. BS