RESTRICTED

STANDARD SIZE 2-70	GREAT AND PROGRESS STANDARD												
CHG SIZE 4950	APPROVAL G.H.M.	DATE 10-9-68											DEVELOPMENT NO. 5804950

SHEET 4 OF 8

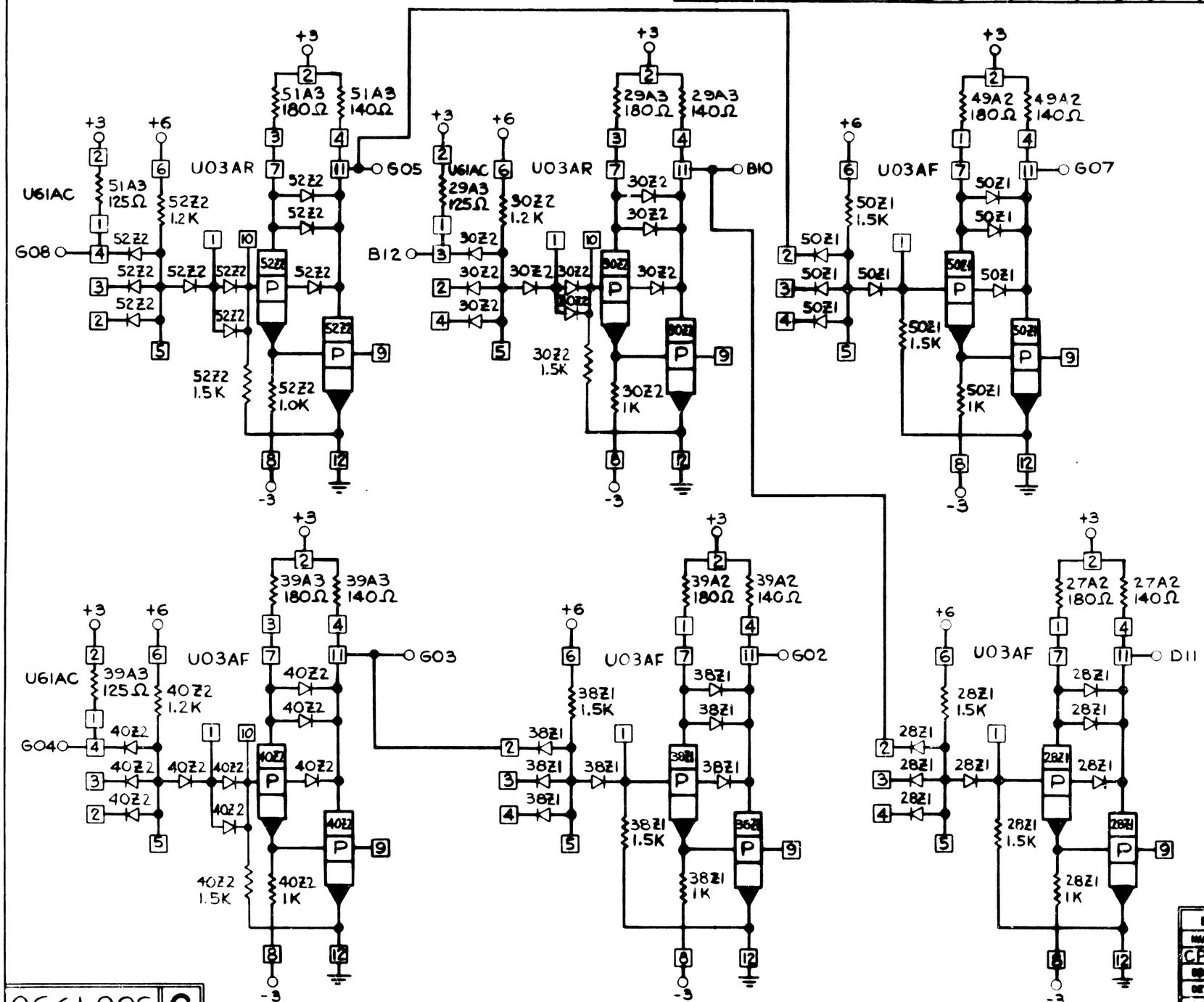

INTERNATIONAL BUSINESS MACHINES CORP			
NAME	CARD ASM-MARK & CPU CONTROL LINES RECEIVE		
DRAWN	E.J.S. 12-1-68	TYPE	2362
DETAIL	E.J.S. 11-1-68	SCALE	NONE
CHECK	E.J.S. 12-2-68	DRAW	
APPRO	G.H.M. 12-2-68	CHECK	

C 5804950