RESTRICTED

STANDARD CODE	CIRCUIT AND PACKAGING STANDARD	SYM	DATE	CHANGE NO.	SYM	DATE	CHANGE NO.	DEVELOPMENT NO.	G/R
2-7040			3-20-64	0-314-[illegible]					
CARD CODE	APPROVAL DATE		11-3-64	161619					
4950	G.H.M 11-2-64							5804950	

SHEET 6 OF 8

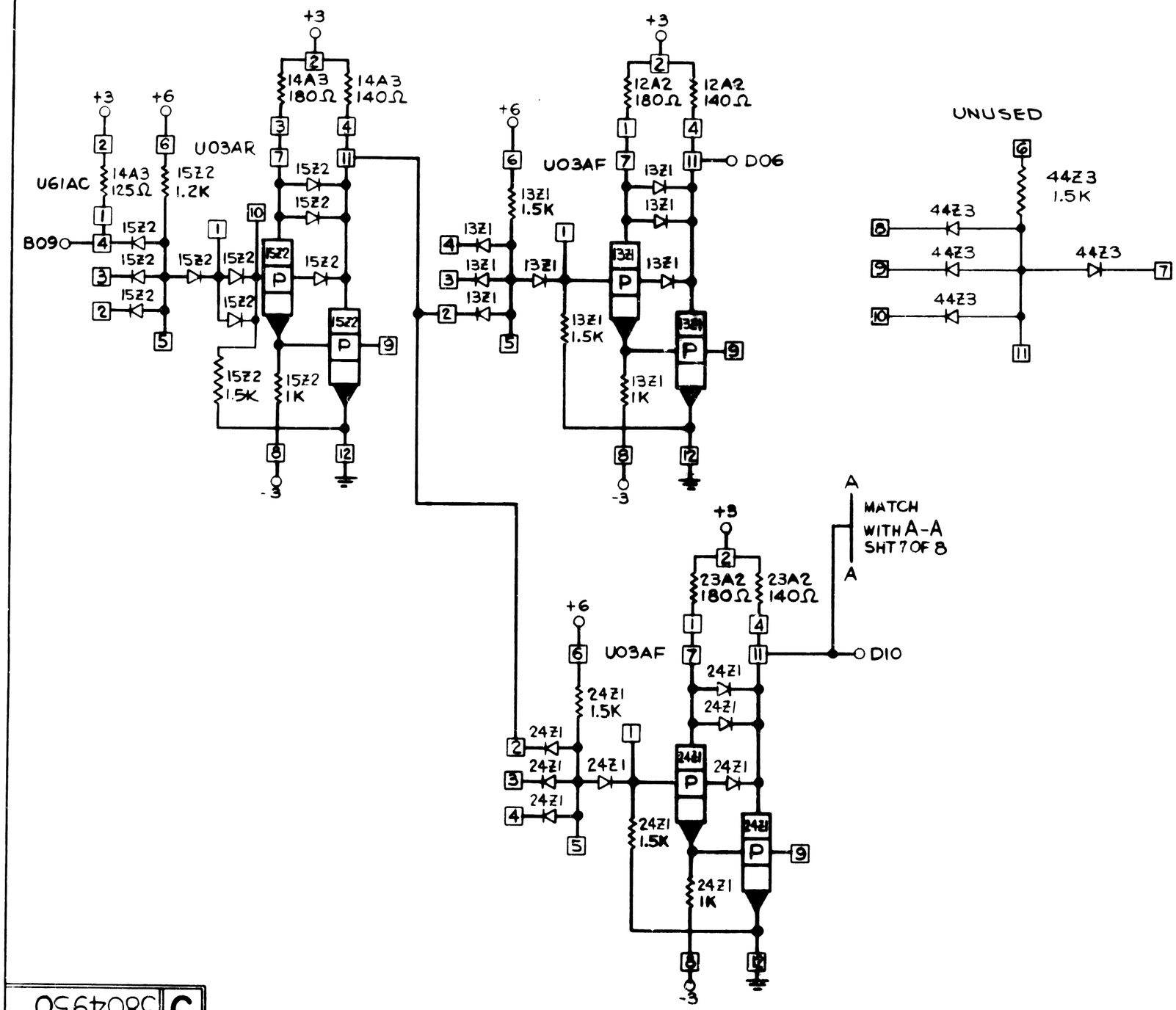

INTERNATIONAL BUSINESS MACHINES CORP				
NAME	CARD ASM-MARK E			
CPU CONTROL LINES RECEIVE				
DESIGN	EJS 2-19-63	TYPE	2362	
DETAIL	EJS 2-19-63	SCALE	NONE	
CHECK	EJS 2-19-63	DRAW		
APPRO	G.H.M. 5-4-64	CHECK		

C 5804950