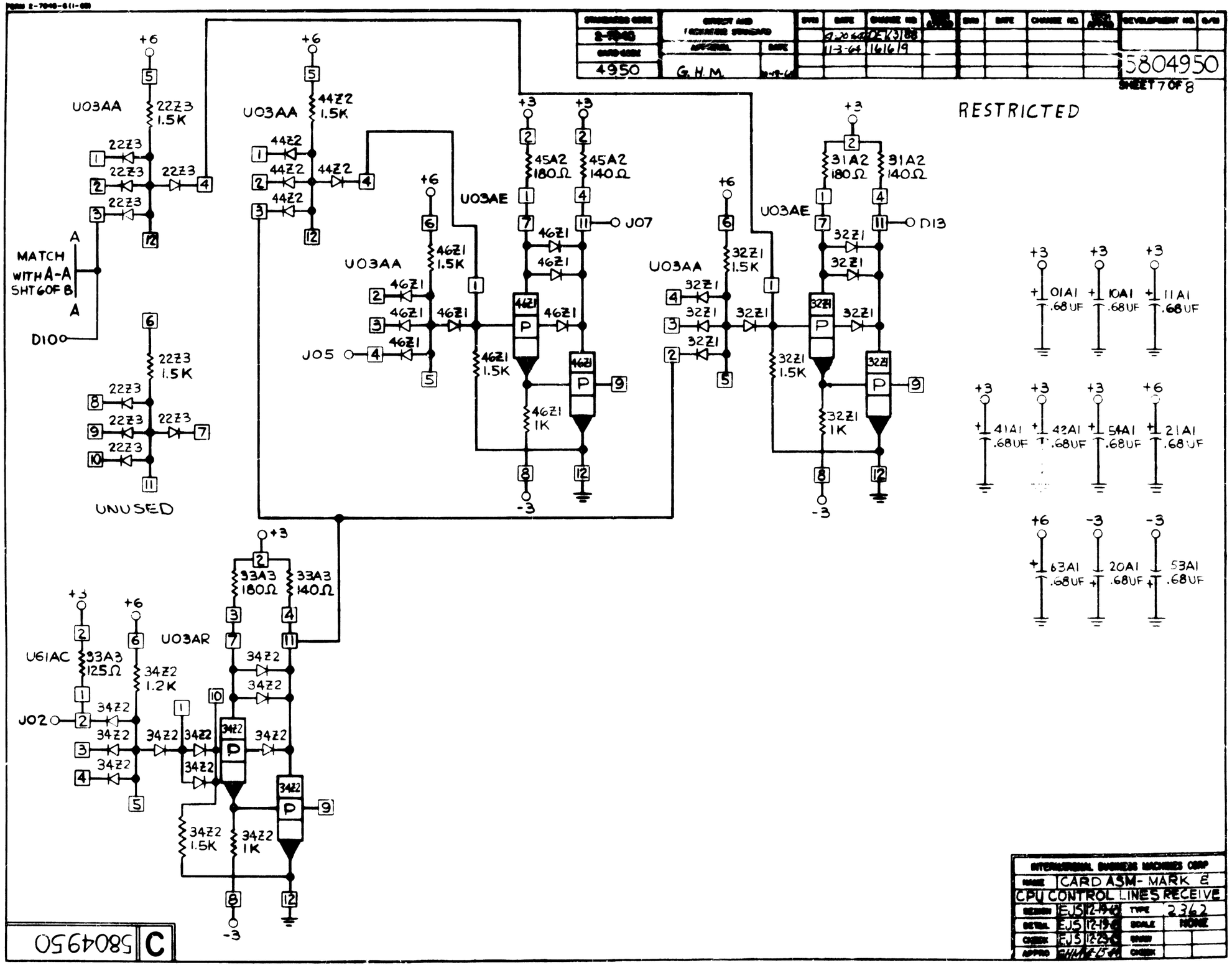
4950
G.H.M.
5804950
SHEET 7 OF 8
RESTRICTED
U03AA
22Z3
1.5K
MATCH WITH A-A SHT 6 OF B
D10
UNUSED
44Z2
1.5K
U03AE
45A2
180Ω
45A2
140Ω
J07
46Z1
1.5K
46Z1
1K
J05
31A2
180Ω
31A2
140Ω
D13
32Z1
1.5K
32Z1
1K
01A1
10A1
11A1
41A1
42A1
54A1
21A1
63A1
20A1
53A1
.68UF
U03AR
33A3
180Ω
33A3
140Ω
U61AC
33A3
125Ω
34Z2
1.2K
J02
34Z2
1.5K
34Z2
1K
INTERNATIONAL BUSINESS MACHINES CORP
CARD ASM- MARK E
CPU CONTROL LINES RECEIVE
2362
NONE
C
5804950