RESTRICTED

				4-20-67	DEV3188										
				11-3-64	1161619										
4950	G.H.M.														5804950

SHEET 8 OF 8

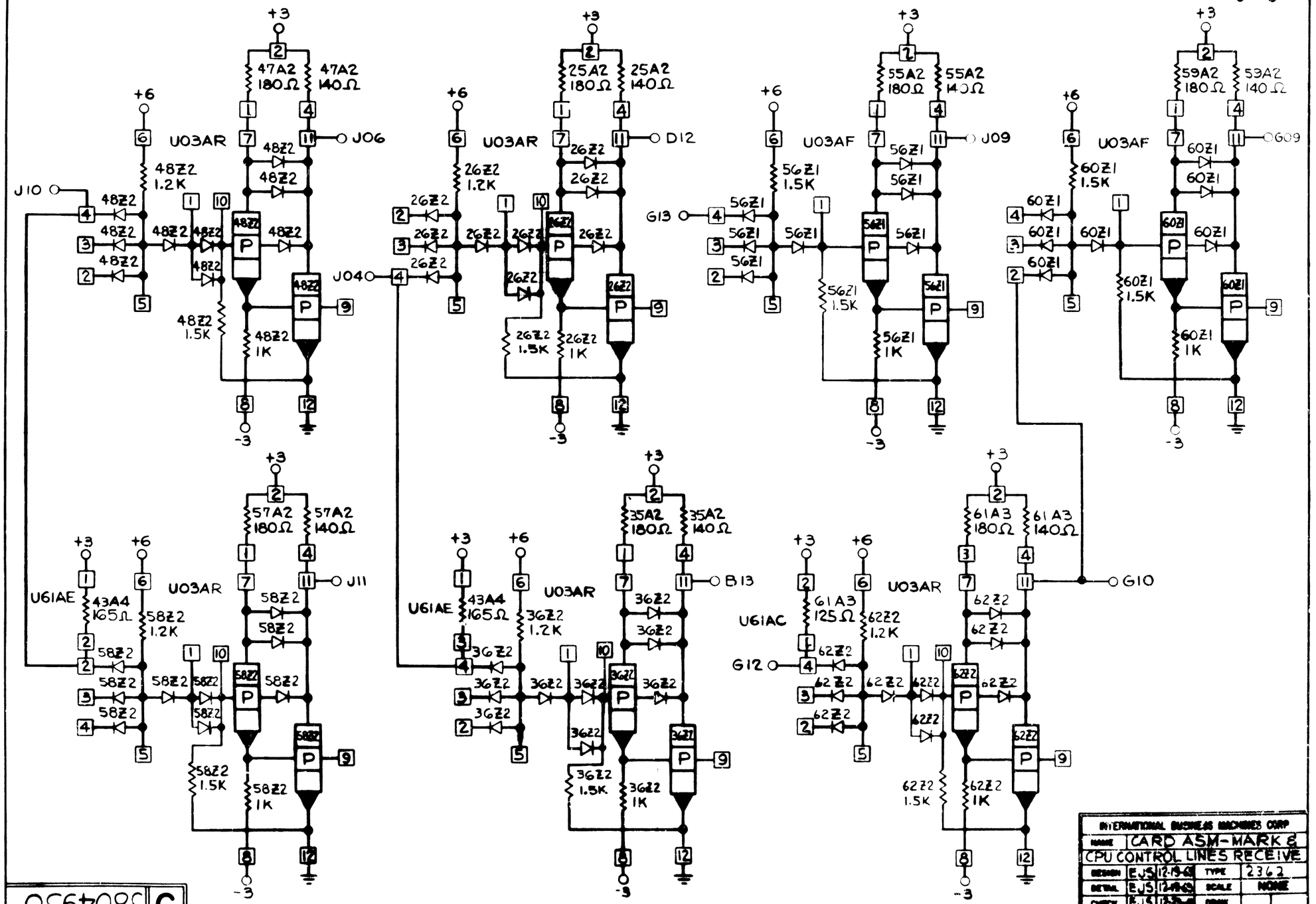

INTERNATIONAL BUSINESS MACHINES CORP				
NAME	CARD ASM-MARK 8 CPU CONTROL LINES RECEIVE			
DESIGN	EJS 12-19-63	TYPE	2362	
DETAIL	EJS 12-19-63	SCALE	NONE	
CHECK	EJS 12-19-63	DRAW		
APPRO	GHM 12-19-63	CHECK		

C 5804950