FORM 2-7046-6 (1-63)

STANDARD CODE	CIRCUIT SED PACKAGING STANDARD		SYM	DATE	CHANGE NO.	TECH APPRO	SYM	DATE	CHANGE NO.	TECH APPRO	DEVELOPMENT NO.	Q/B
2-7046	APPROVAL	DATE		6-4-64	DEV. 3612							
CARD CODE 4951	GHM	2-17-64		11-18-64	161640						5804951	

SHEET 5 OF 9

RESTRICTED

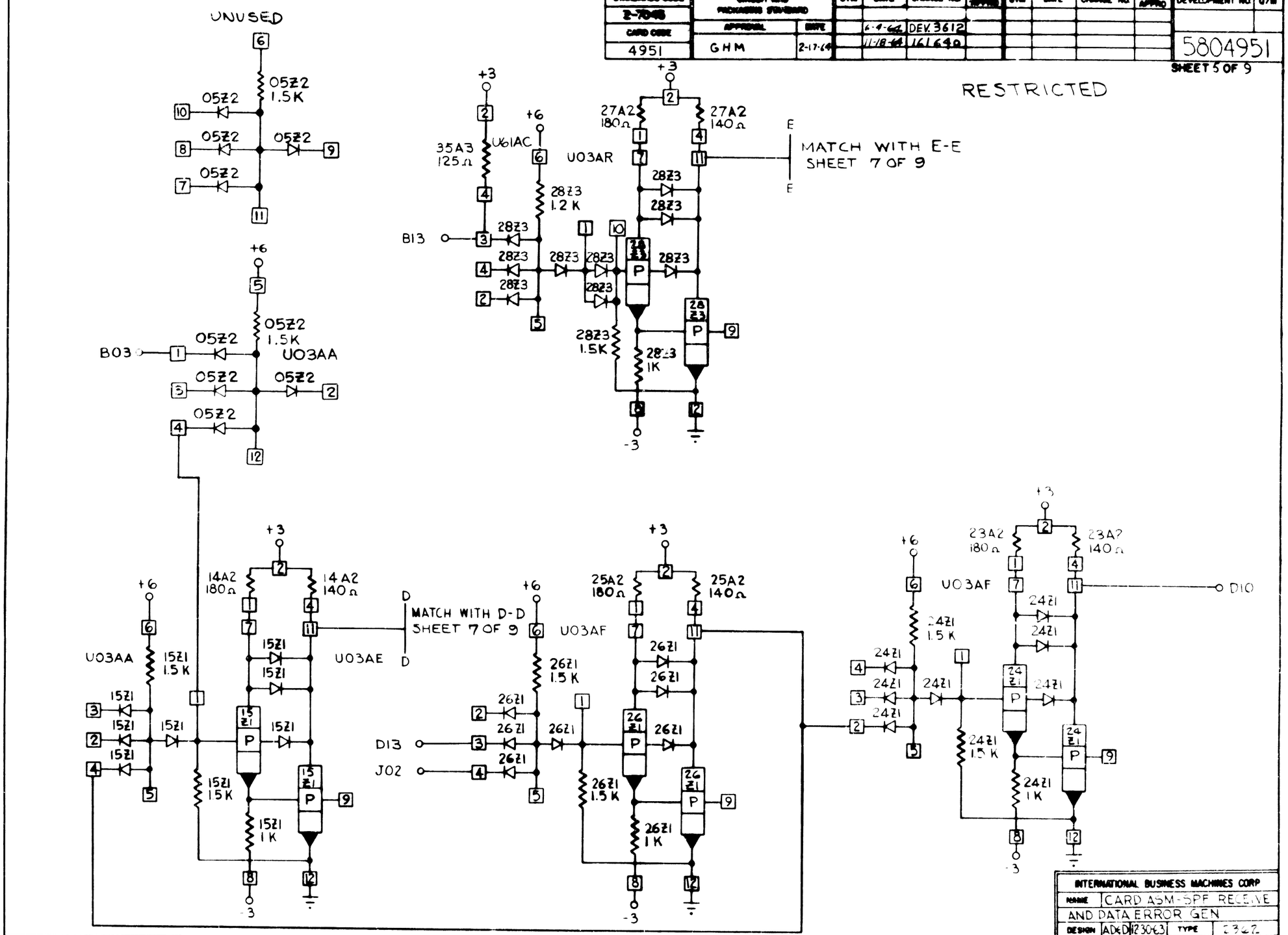

INTERNATIONAL BUSINESS MACHINES CORP				
NAME	CARD ASM-SPF RECEIVE AND DATA ERROR GEN			
DESIGN	ADED	12-30-63	TYPE	2362
DETAIL	ADED	12-30-63	SCALE	NONE
CHECK	ADED	12-30-63	DRAW	
APPRO	GHM	2-17-64	CHECK	2384

C 5804951