FORM 2-7045-6 (1-63)

RESTRICTED

STANDARDS CODE	CIRCUIT AND PACKAGING STANDARD		SYM	DATE	CHANGE NO.	TECH APPRO	SYM	DATE	CHANGE NO.	TECH APPRO	DEVELOPMENT NO.	O/M
2-7045	APPROVAL	DATE		6-4-64	DEV. 3612						5804951	
CARD CODE 4951	GHM	2-17-64		11-18-64	161640							

SHEET 6 OF 9

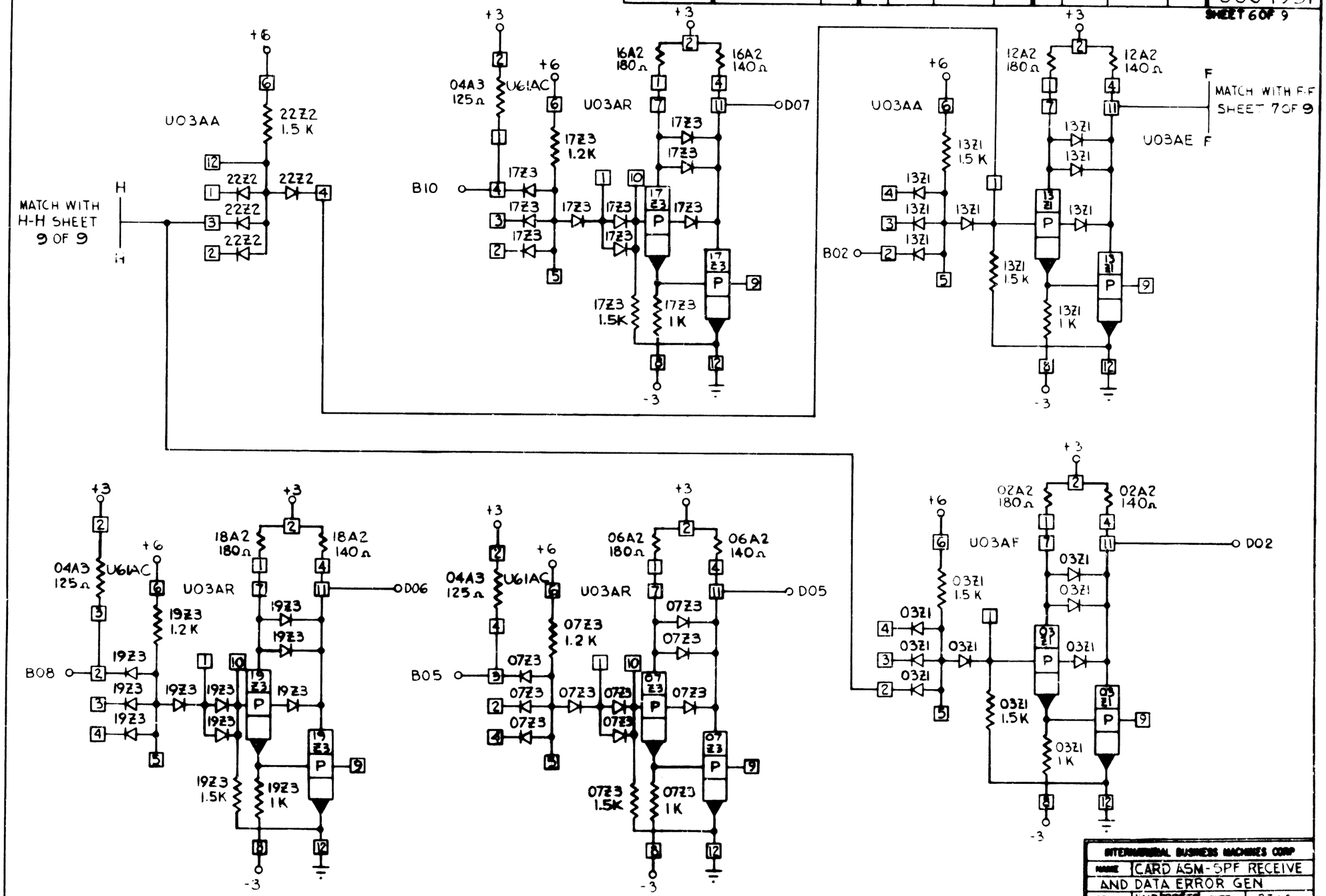

INTERNATIONAL BUSINESS MACHINES CORP				
NAME	CARD ASM-SPF RECEIVE AND DATA ERROR GEN			
DESIGN	ADD 12-30-63	TYPE	2362	
DETAIL	ADD 12-30-63	SCALE	NONE	
CHECK	ADD 12-30-63	SPAN		
APPRO	GHM 2-17-64	CHECK	OJ 4-28-64	

C 5804951