FORM 2-7045-6 (1-63)

STANDARDS CODE	CIRCUIT AND PACKAGING STANDARD		SYM	DATE	CHANGE NO	TECH APPRO	SYM	DATE	CHANGE NO	TECH APPRO	DEVELOPMENT NO	Q/M
2-7045												
CARD CODE	APPROVAL	DATE										
4953	GHM			5-24-64	DE13623						5804953	
				12-2-64	161641							

RESTRICTED

SHEET 5 OF 6

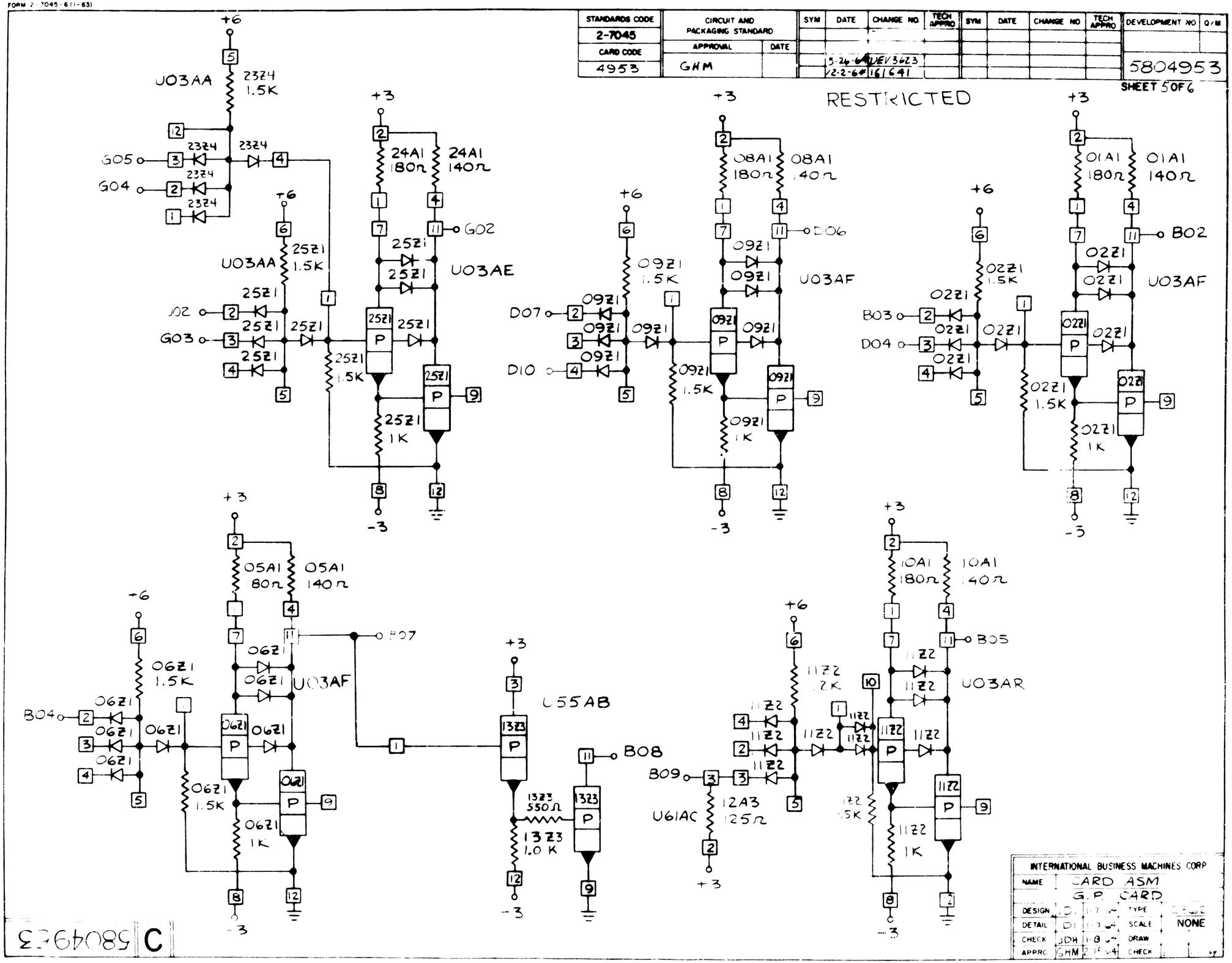

INTERNATIONAL BUSINESS MACHINES CORP					
NAME	CARD ASM G.P. CARD				
DESIGN	D		TYPE		
DETAIL	D1		SCALE	NONE	
CHECK	JDH		DRAW		
APPRO	GHM		CHECK		

C 5804953