STANDARDS CODE	CIRCUIT AND PACKAGING STANDARD		SYM	DATE	CHANGE NO.	TECH APPRO	SYM	DATE	CHANGE NO.	TECH APPRO	DEVELOPMENT NO	Q/M
2-7045				A-23-64	DEV 3168							
CARD CODE	APPROVAL	DATE		10-21-64	1616603						5804957	
4957												

RESTRICTED

SHEET 5 OF 8

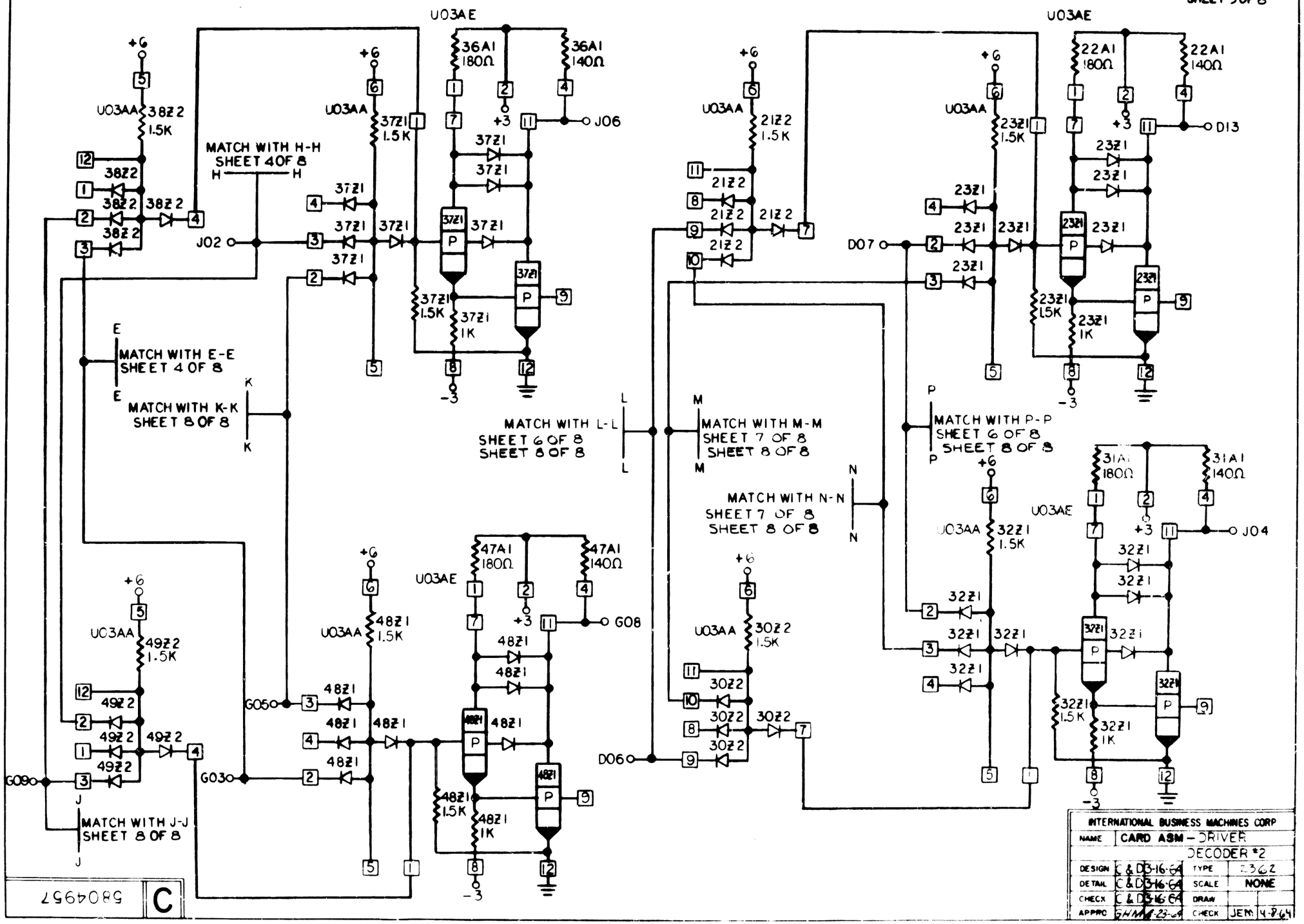

INTERNATIONAL BUSINESS MACHINES CORP			
NAME	CARD ASM – DRIVER DECODER #2		
DESIGN	C & D 3-16-64	TYPE	2362
DETAIL	C & D 3-16-64	SCALE	NONE
CHECK	C & D 3-16-64	DRAW	
APPRO	GHM 4-23-64	CHECK	JEM 4-8-64

5804957 C