FORM 2-7045-8 (6-63)

RESTRICTED

STANDARDS CODE	CIRCUIT AND PACKAGING STANDARD		SYM	DATE	CHANGE NO	TECH APPRO	SYM	DATE	CHANGE NO	TECH APPRO	DEVELOPMENT NO	Q/M
2-7045				4-23-64	REV 3/68							
CARD CODE	APPROVAL	DATE		10-21-64	161603						5804957	
4957												
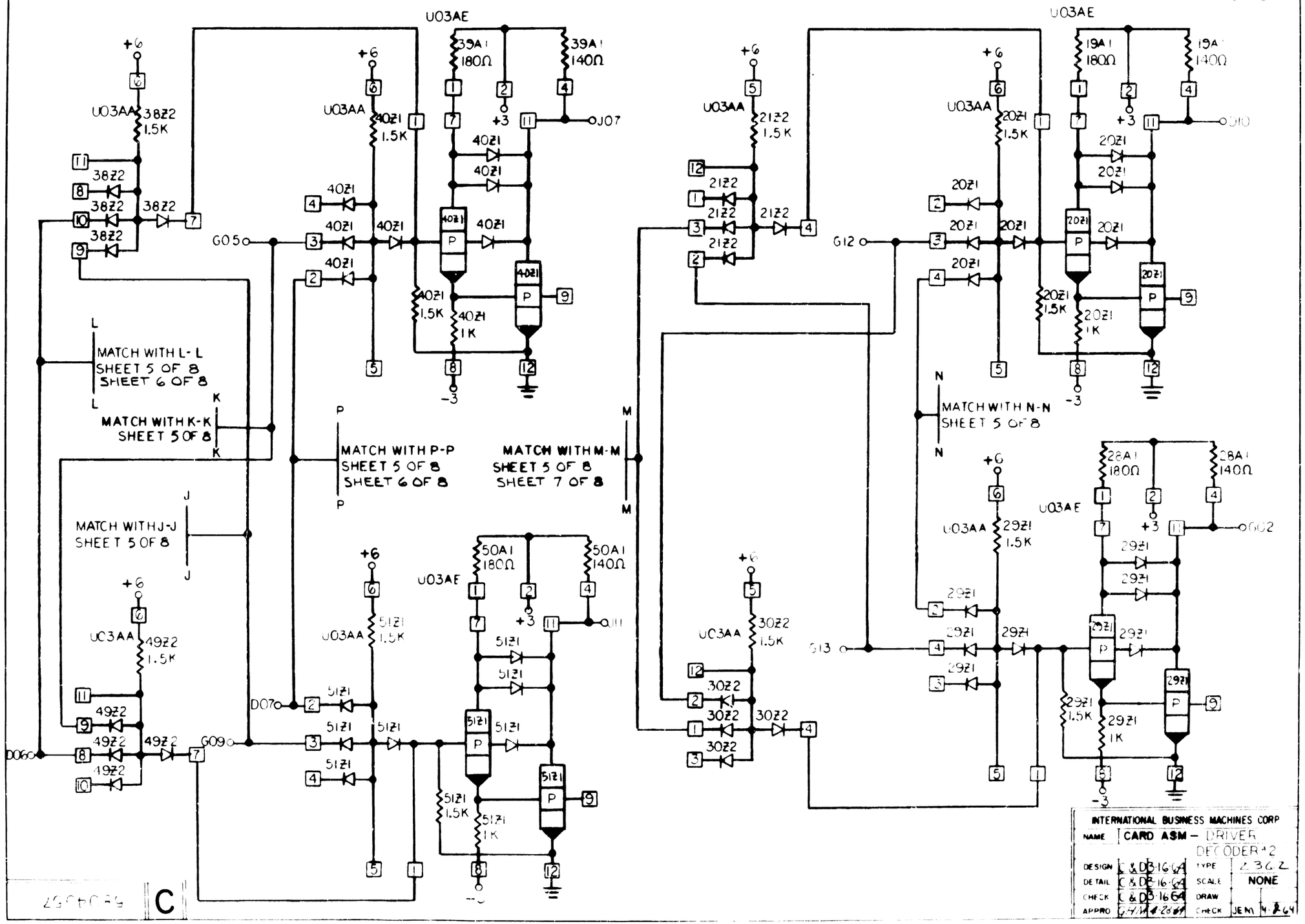
SHEET 8 OF 8