STANDARDS CODE	CIRCUIT AND PACKAGING STANDARD		SYM	DATE	CHANGE NO.		SYM	DATE	CHANGE NO.		DEVELOPMENT NO.	S/N
2-7048				6-1-64	DEK 8237							
CARD CODE	APPROVAL	DATE		10-20-64	161605							
4959											5804959	

SHEET 5 OF 9

RESTRICTED

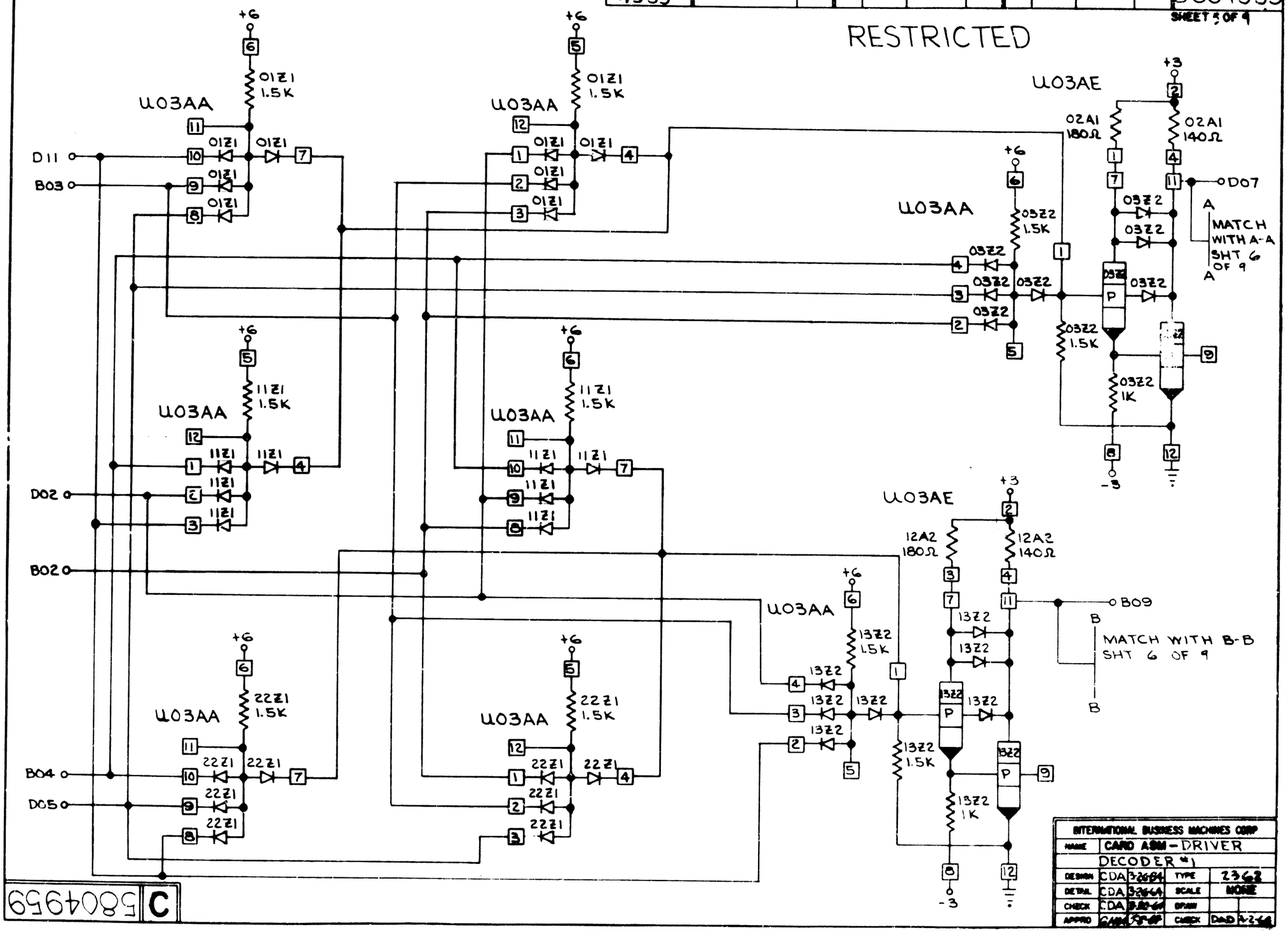

INTERNATIONAL BUSINESS MACHINES CORP				
NAME	CARD ASM - DRIVER DECODER #1			
DESIGN	CDA	3-26-64	TYPE	2362
DETAIL	CDA	3-26-64	SCALE	NONE
CHECK	CDA	3-26-64	DRAW	
APPRO	CAM	3-26-64	CHECK	DAD 4-2-64

C 5804959