STANDARDS CODE	CIRCUIT AND PACKAGING STANDARD		SYM	DATE	CHANGE NO.		SYM	DATE	CHANGE NO.		DEVELOPMENT NO.	SYM
2-7046	APPROVAL	DATE		6-1-64	DEK 3537							
CARD CODE				10-20-64	161605							
4959												

5804959

SHEET 7 OF 9

RESTRICTED

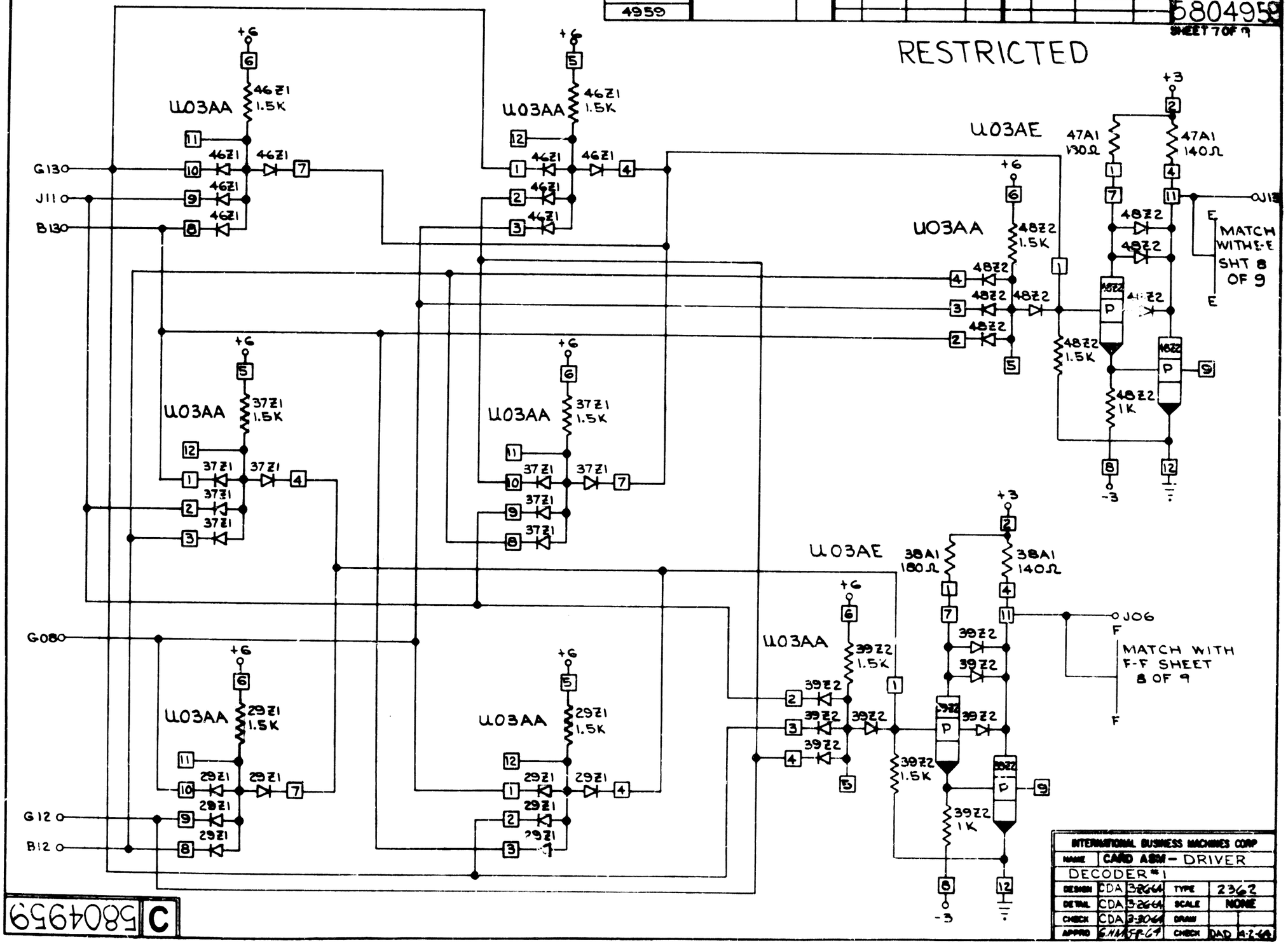

INTERNATIONAL BUSINESS MACHINES CORP					
NAME	CARD ASM - DRIVER DECODER #1				
DESIGN	CDA	3-26-64	TYPE	2362	
DETAIL	CDA	3-26-64	SCALE	NONE	
CHECK	CDA	3-30-64	DRAW		
APPRO	G.H.A.	4-7-64	CHECK	DAD	4-7-64

C 5804959