STANDARDS CODE	CIRCUIT AND PACKAGING STANDARD		SYM	DATE	CHANGE NO		SYM	DATE	CHANGE NO		DEVELOPMENT NO	G/M
2-1048	APPROVAL	DATE		6-8-64	DEX 3311						5804959	
CARD CODE				10-20-64	K61605							
4959												

SHEET 4 OF 4
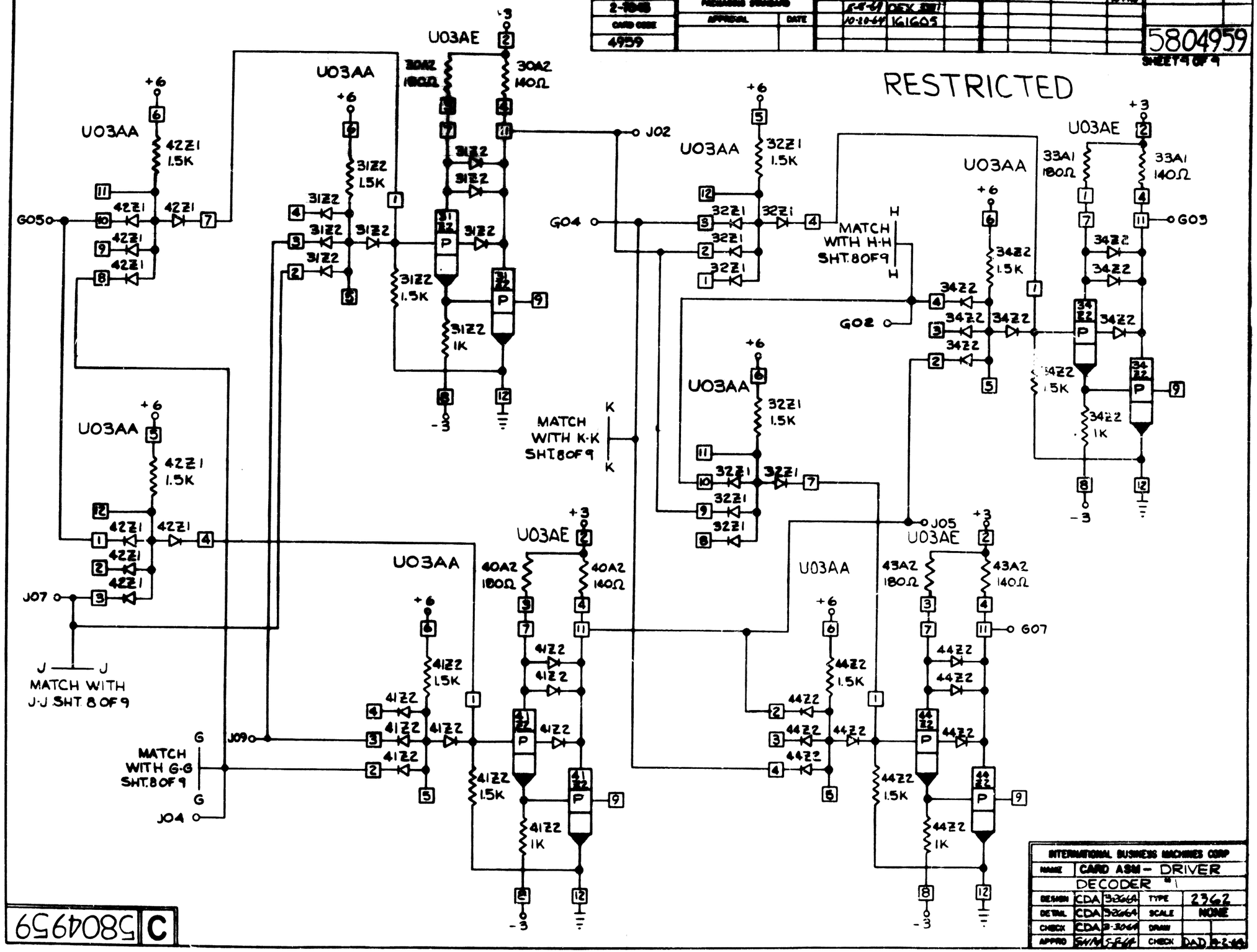
RESTRICTED