STANDARDS CODE	CIRCUIT AND PACKAGING STANDARD		SYM	DATE	CHANGE NO.	TECH APPRO	SYM	DATE	CHANGE NO.	TECH APPRO	DEVELOPMENT NO.	G/M
2-7048				1-21-63	162062							
CARD CODE	APPROVAL	DATE										
4961	GHM	130CT65									5804961	

SHEET 7 OF 9

RESTRICTED

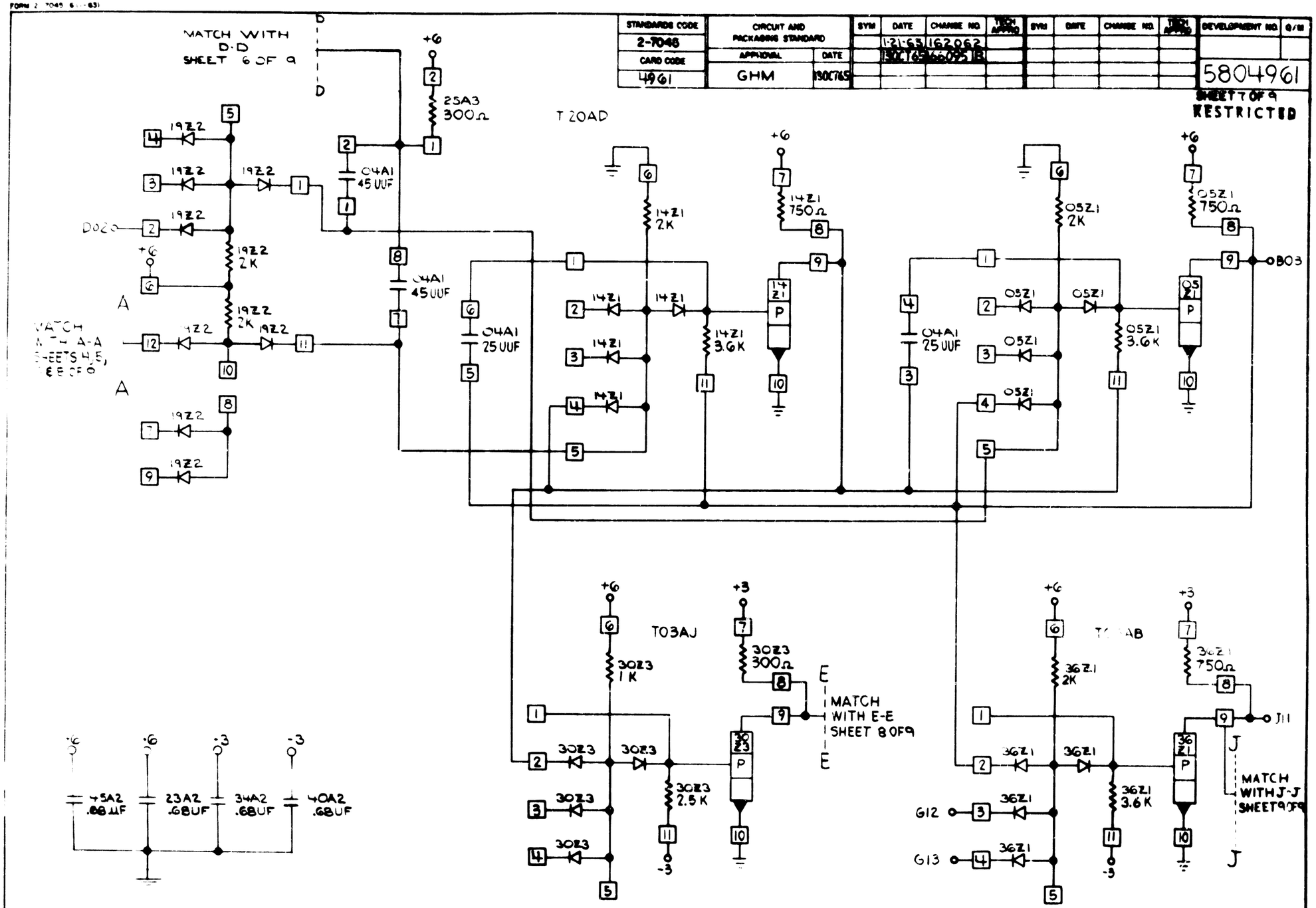

INTERNATIONAL BUSINESS MACHINES CORP			
NAME	CARD ASM. - SAR TEST COUNTER		
DESIGN		TYPE	2361A
DETAIL		SCALE	NONE
CHECK		DRAW	GT
APPRO	GHM	CHECK	

C 5804961