STANDARDS CODE 7045

CARD CODE 4964

SHEET 5 OF 11

RESTRICTED

SHEET 5 OF 11

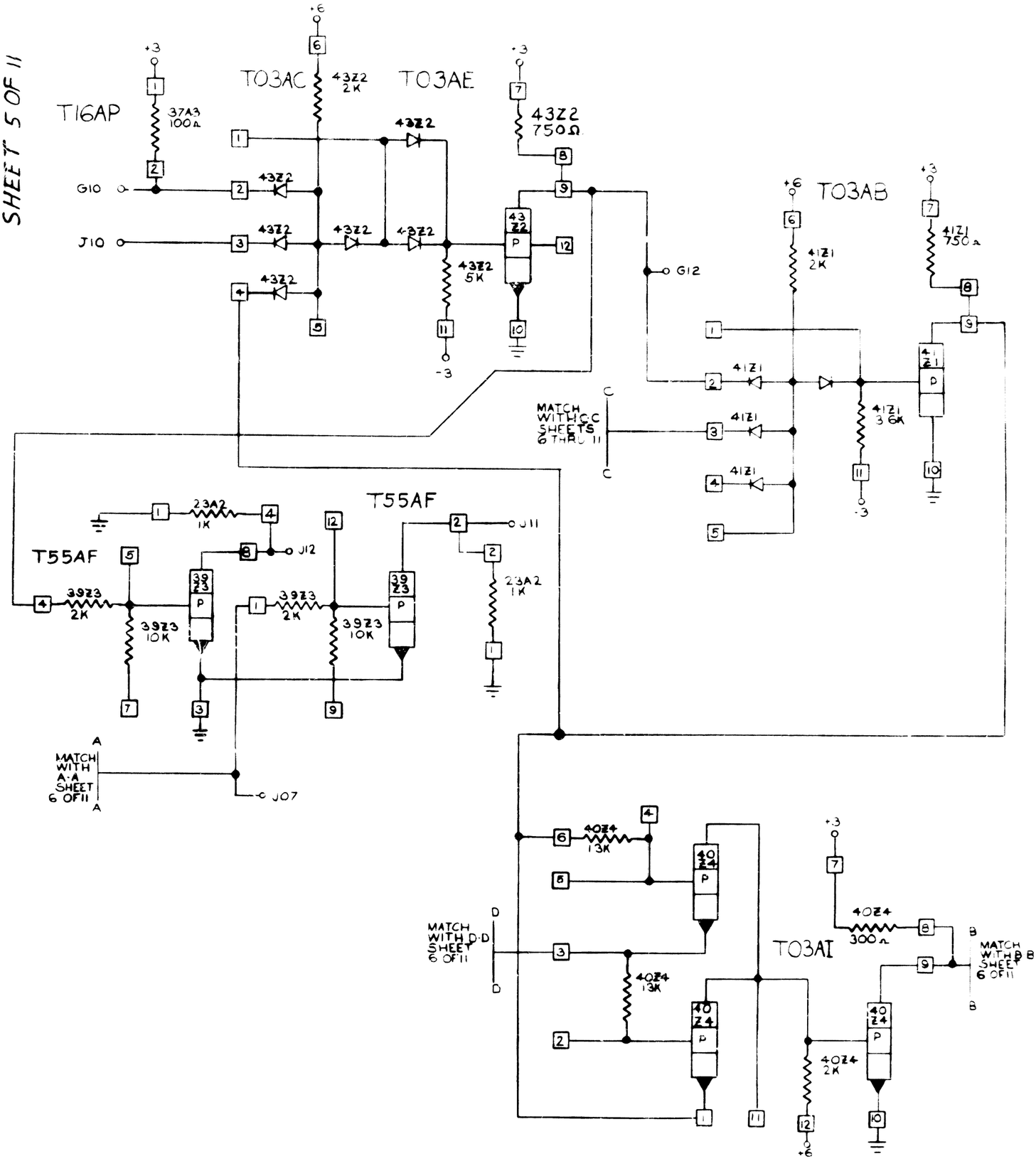

CIRCUIT AND PACKAGING STANDARD	
APPROVAL	DATE
R.C. Bradley	8-20-64

INTERNATIONAL BUSINESS MACHINES CORP.													
NAME	CARD ASM 2WAY LATCH				DATE	CHANGE NO.	APPROVAL	DATE	CHANGE NO	APPROVAL	DEVELOPMENT NO		
					09-18-64	DEV 3909							
DESIGN	NIS	MODEL	2361A		12-25-64	162190							
DETAIL	NIS	SCALE	NONE										
CHECK	8-19-64	DRAW											
APPRO	12-20-64	CHECK											

C 1964 I.B.M. CORP.