STANDARDS CODE 2-7045

5804964

CARD CODE 4 964

SHEET 6 OF 11

RESTRICTED

SHEET 6 OF 11

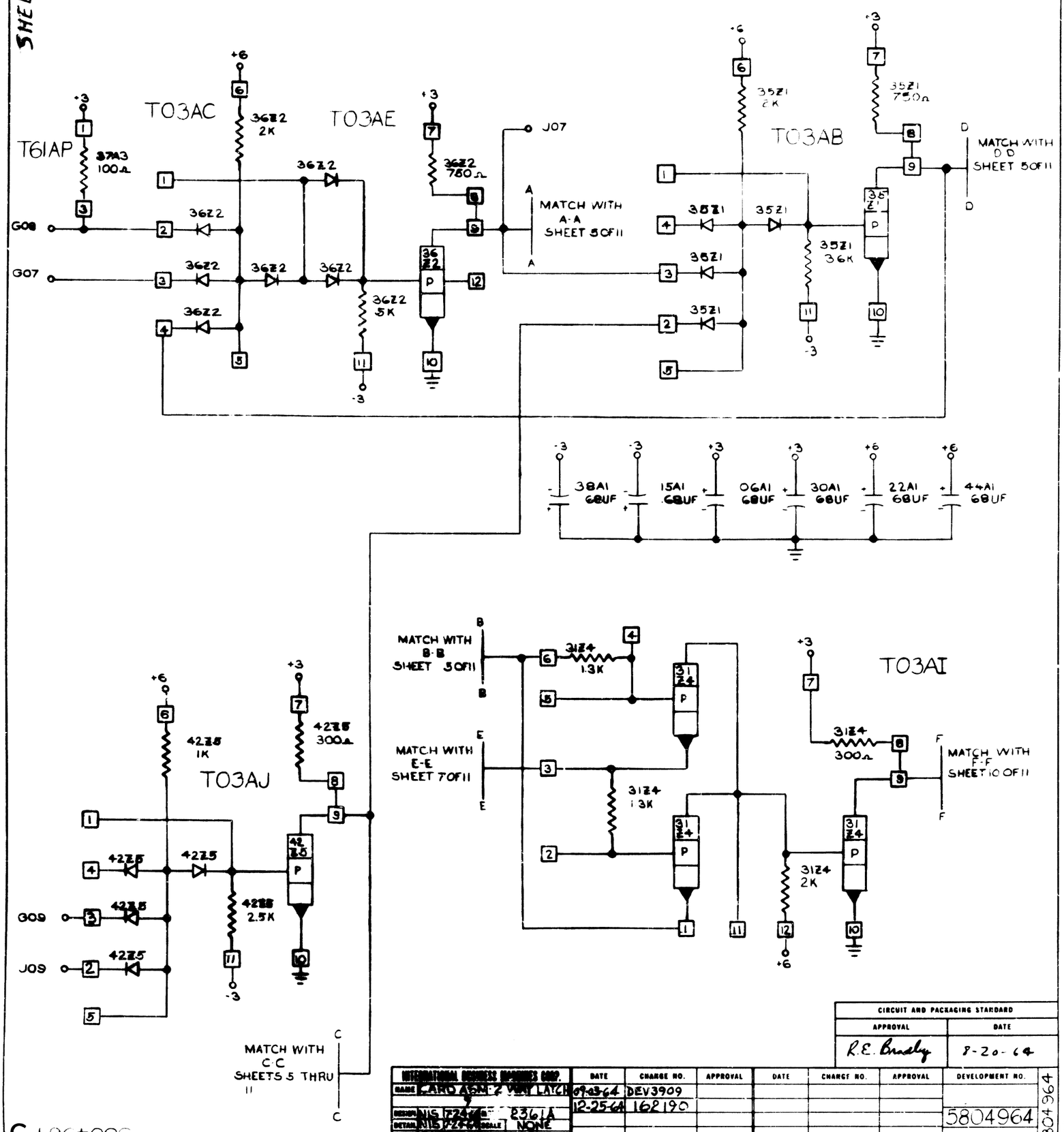

CIRCUIT AND PACKAGING STANDARD	
APPROVAL	DATE
R.E. Brady	8-20-64

INTERNATIONAL BUSINESS MACHINES CORP.	DATE	CHARGE NO.	APPROVAL	DATE	CHARGE NO.	APPROVAL	DEVELOPMENT NO.
NAME CARD ASM 2 VERT LATCH	09-23-64	DEV3909					
	12-25-64	162190					5804964
DESIGN NIS 7-24-64 / DRAWN 2361A							
DETAIL NIS 7-24-64 / SCALE NONE							
CHECK / DRAWN							
APPROV / CHECK							

5804964 C