STANDARDS CODE 2 1045

CARD CODE 4324

SHEET 7 OF 11

RESTRICTED

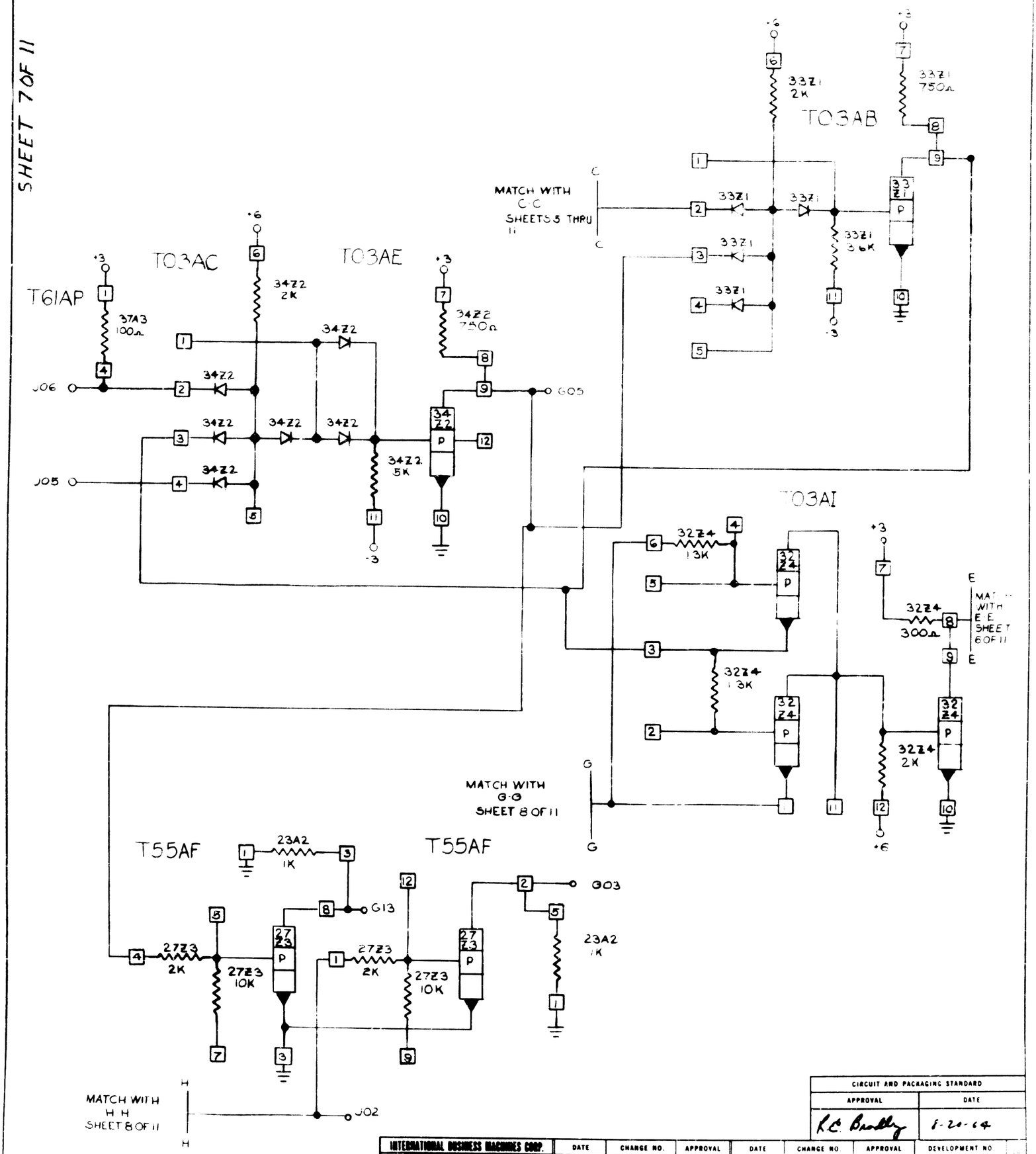

CIRCUIT AND PACKAGING STANDARD	
APPROVAL	DATE
R.C. Bradley	8-20-64

| INTERNATIONAL BUSINESS MACHINES CORP. | | |