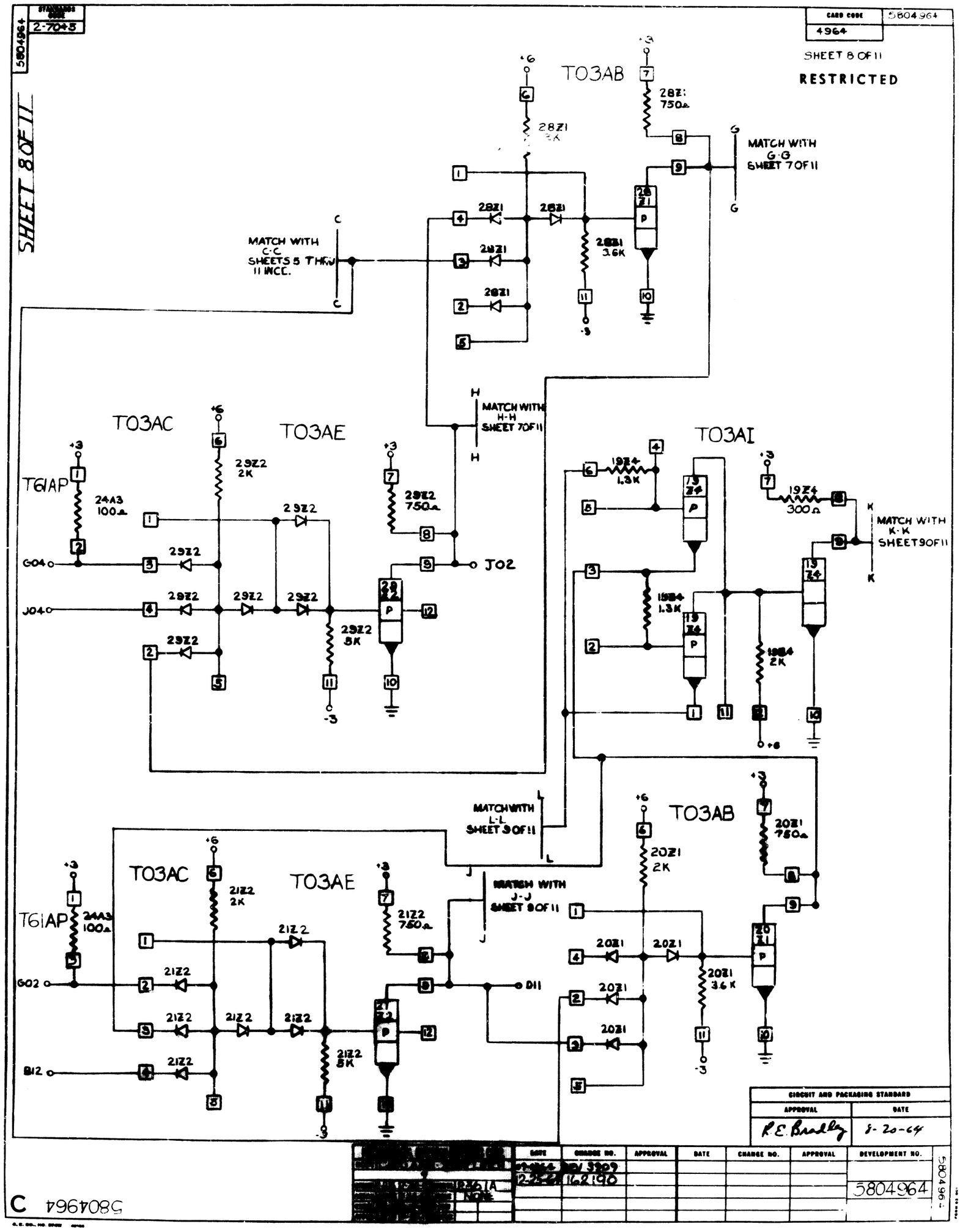
STANDARDS CODE 2-7045
5804964
CARD CODE 4964
5804964
SHEET 8 OF 11
RESTRICTED
SHEET 8 OF 11
T03AB
28Z1 750Ω
28Z1 2K
28Z1
28Z1
28Z1
28Z1
28Z1 3.6K
MATCH WITH G-G SHEET 7 OF 11
MATCH WITH C-C SHEETS 5 THRU 11 INCL.
T03AC
T03AE
T03AI
T61AP
24A3 100Ω
29Z2 2K
29Z2
29Z2 750Ω
29Z2
29Z2
29Z2
29Z2
29Z2
29Z2 5K
G04
J04
J02
MATCH WITH H-H SHEET 7 OF 11
19Z4 1.3K
19Z4 300Ω
19Z4
19Z4
19Z4 1.3K
19Z4 2K
MATCH WITH K-K SHEET 9 OF 11
MATCH WITH L-L SHEET 9 OF 11
T03AB
20Z1 2K
20Z1 750Ω
20Z1
20Z1
20Z1
20Z1
20Z1
20Z1 3.6K
T03AC
T03AE
T61AP
24A3 100Ω
21Z2 2K
21Z2
21Z2 750Ω
21Z2
21Z2
21Z2
21Z2
21Z2
21Z2 5K
G02
B12
D11
MATCH WITH J-J SHEET 9 OF 11
CIRCUIT AND PACKAGING STANDARD
APPROVAL
DATE
R.E. Bradley
8-20-64
DATE
CHANGE NO.
APPROVAL
DATE
CHANGE NO.
APPROVAL
DEVELOPMENT NO.
5804964
C
5804964