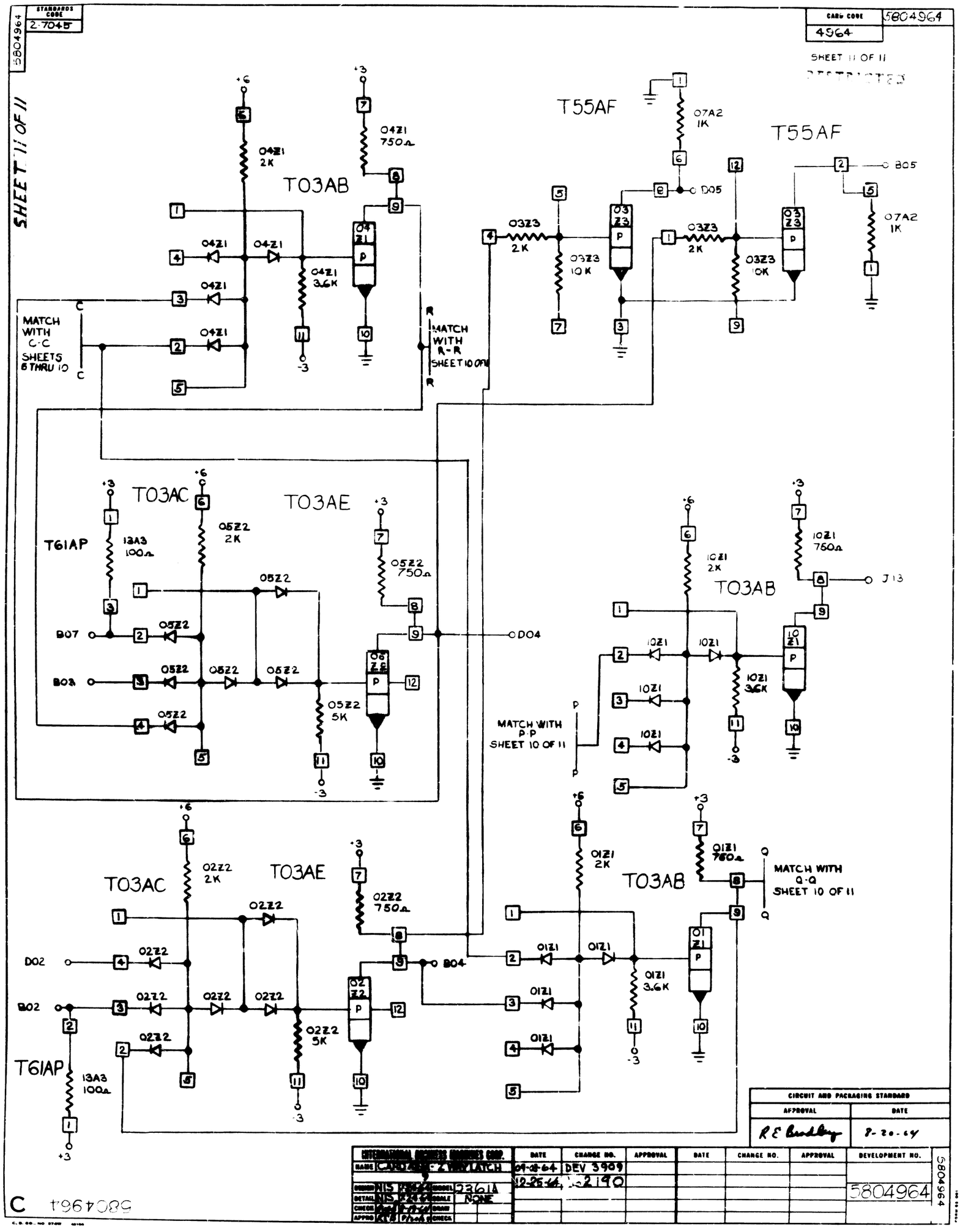
STANDARDS CODE 2-7045
CARD CODE 4964
5804964
SHEET 11 OF 11
RESTRICTED
SHEET 11 OF 11
T03AB
T55AF
T55AF
T03AC
T03AE
T61AP
T03AB
T03AC
T03AE
T61AP
T03AB
04Z1 2K
04Z1 750Ω
04Z1 3.6K
07A2 1K
03Z3 2K
03Z3 10K
03Z3 10K
03Z3 2K
07A2 1K
B05
D05
MATCH WITH C-C SHEETS 8 THRU 10
MATCH WITH R-R SHEET 10 OF 11
05Z2 2K
05Z2 750Ω
05Z2 5K
13A3 100Ω
B07
B03
D04
10Z1 2K
10Z1 750Ω
10Z1 3.6K
J13
MATCH WITH P-P SHEET 10 OF 11
02Z2 2K
02Z2 750Ω
02Z2 5K
13A3 100Ω
D02
B02
B04
01Z1 2K
01Z1 750Ω
01Z1 3.6K
MATCH WITH Q-Q SHEET 10 OF 11
CIRCUIT AND PACKAGING STANDARD
APPROVAL
DATE
R E Bradley
8-20-64
INTERNATIONAL BUSINESS MACHINES CORP.
NAME CROSS CONVERTER
DRAWN NIS
DETAIL NIS
CHECK
APPRD
MODEL 2361A
SCALE NONE
DRAW
CONTROL
DATE
CHANGE NO.
APPROVAL
DEV 3909
12-25-64
DEVELOPMENT NO.
5804964
C
5804964