FORM 2-7046-6 (1-63)

STANDARDS CODE	CIRCUIT AND PACKAGING STANDARD		SYM	DATE	CHANGE NO.	TECH APPRO	SYM	DATE	CHANGE NO.	TECH APPRO	DEVELOPMENT NO.	O/M
2-7046				8-4-64	DV4968							
CARD CODE	APPROVAL	DATE		12-7-64	162175							
4968	GHM	4-1-65		4-1-65	164356	B					5804968	
				7-22-65	164639	C						

SHEET 5 OF 9

FIELD USE RESTRICTED

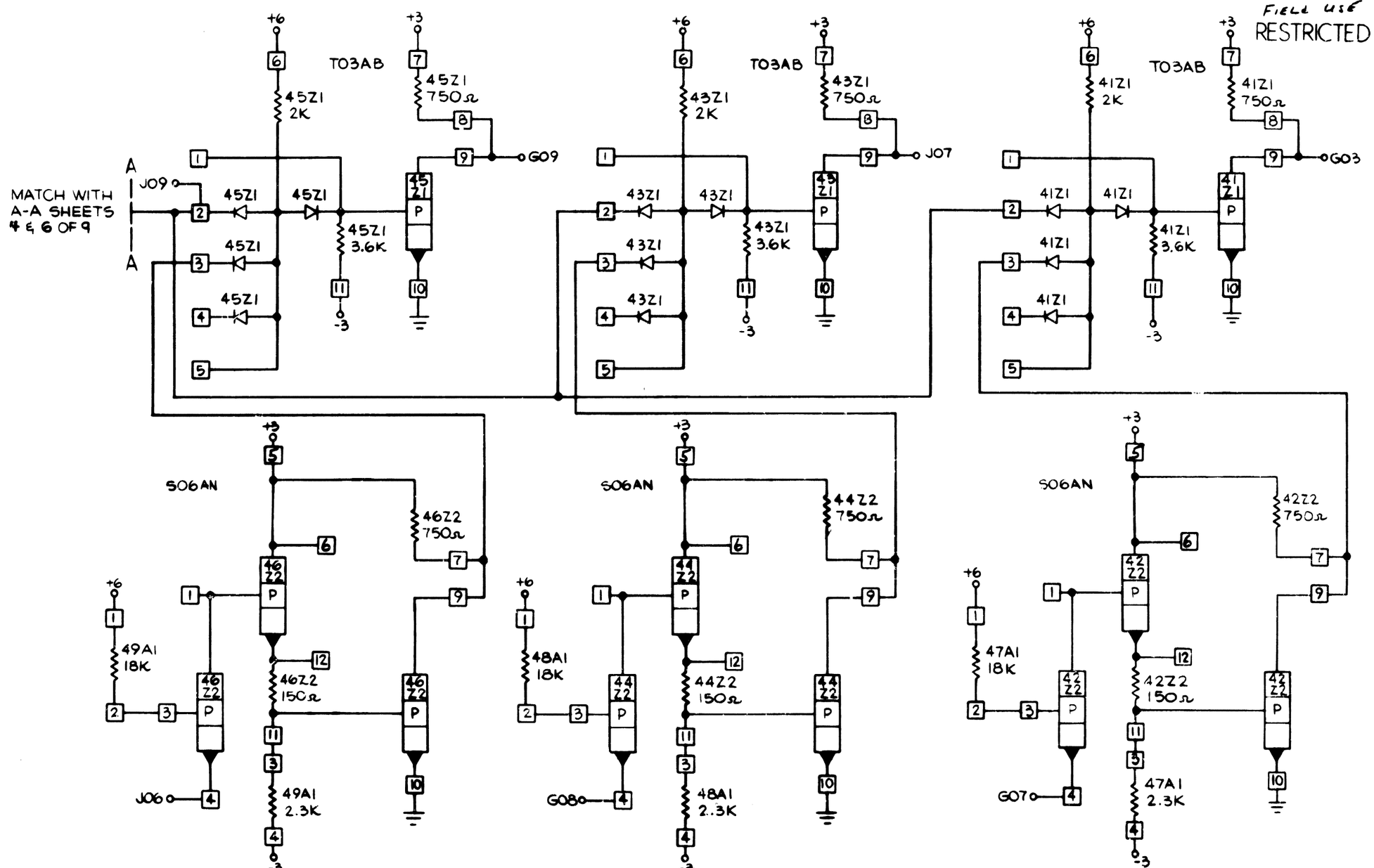

INTERNATIONAL BUSINESS MACHINES CORP				
NAME	CARD ASM - MPX RECEIVER 18			
DESIGN	MFR	2-4-64	TYPE	2361A
DETAIL	MFR	2-4-64	SCALE	NONE
CHECK	[illegible]	[illegible]	DRAW	GT 2-12-64
APPRO	GHM	4-1-65	CHECK	

C 5804968