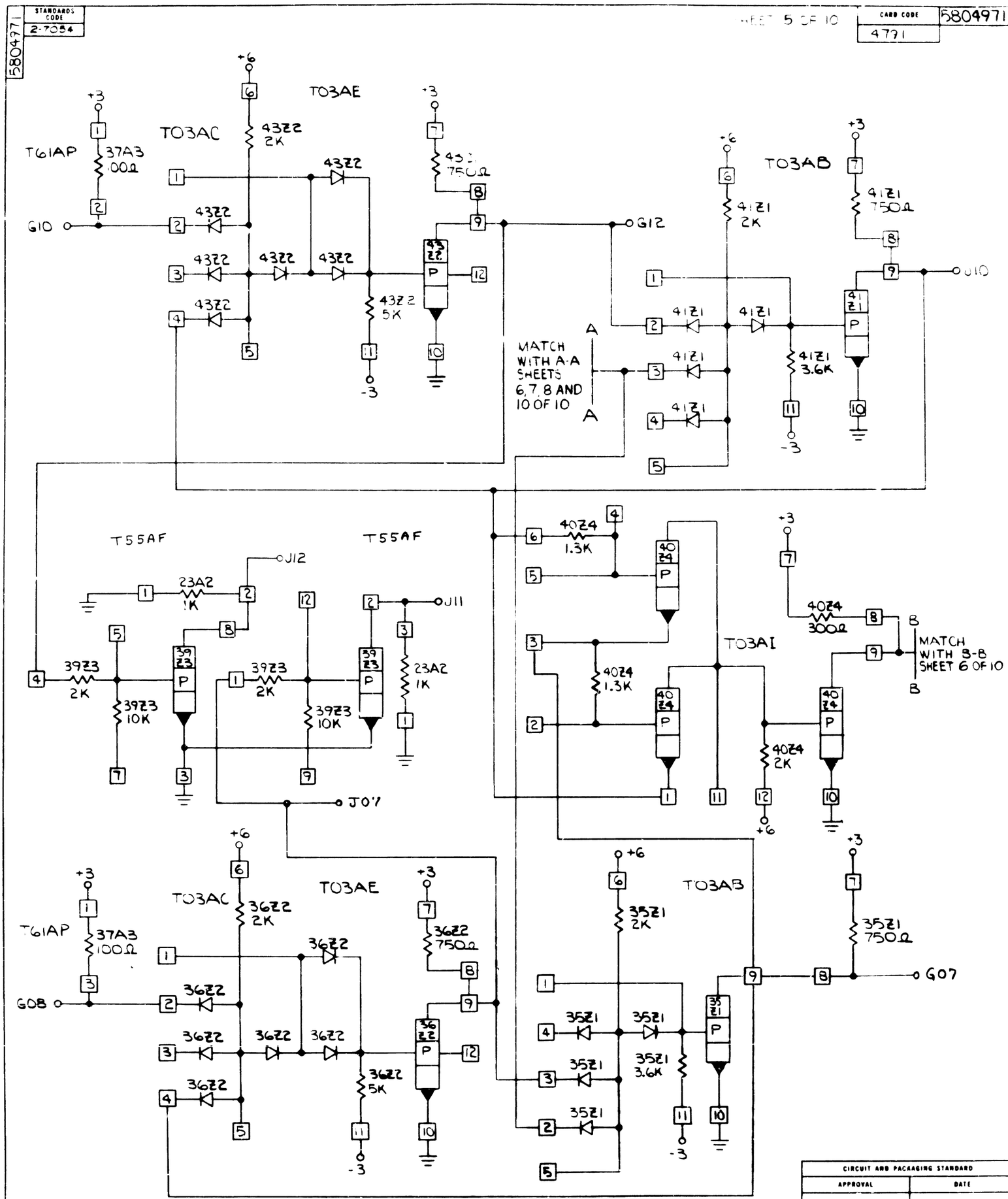
STANDARDS CODE 2-7054
SHEET 5 OF 10
CARD CODE 4791
5804971
T03AE
T03AC
T61AP
37A3 100Ω
43Z2 2K
43Z2 750Ω
43Z2 5K
G10
G12
T03AB
41Z1 2K
41Z1 750Ω
41Z1 3.6K
J10
MATCH WITH A-A SHEETS 6, 7, 8 AND 10 OF 10
T55AF
23A2 1K
J12
J11
39Z3 2K
39Z3 10K
J07
40Z4 1.3K
40Z4 300Ω
40Z4 2K
T03AI
MATCH WITH B-B SHEET 6 OF 10
36Z2 2K
36Z2 750Ω
36Z2 5K
G08
35Z1 2K
35Z1 750Ω
35Z1 3.6K
G07
D03, J03 ARE NOT BUSSED
B06, G06 ARE NOT BUSSED
B11, G11 ARE NOT BUSSED
D08, J08 ARE BUSSED
CIRCUIT AND PACKAGING STANDARD
APPROVAL
DATE
INTERNATIONAL BUSINESS MACHINES CORP.
NAME CARD ASM - 1 WAY LATCH 9
DATE 9-03-64
CHANGE NO. DEV 3911
2-25-65 163104
12-07-65 165558 B
DEVELOPMENT NO.
5804971
C