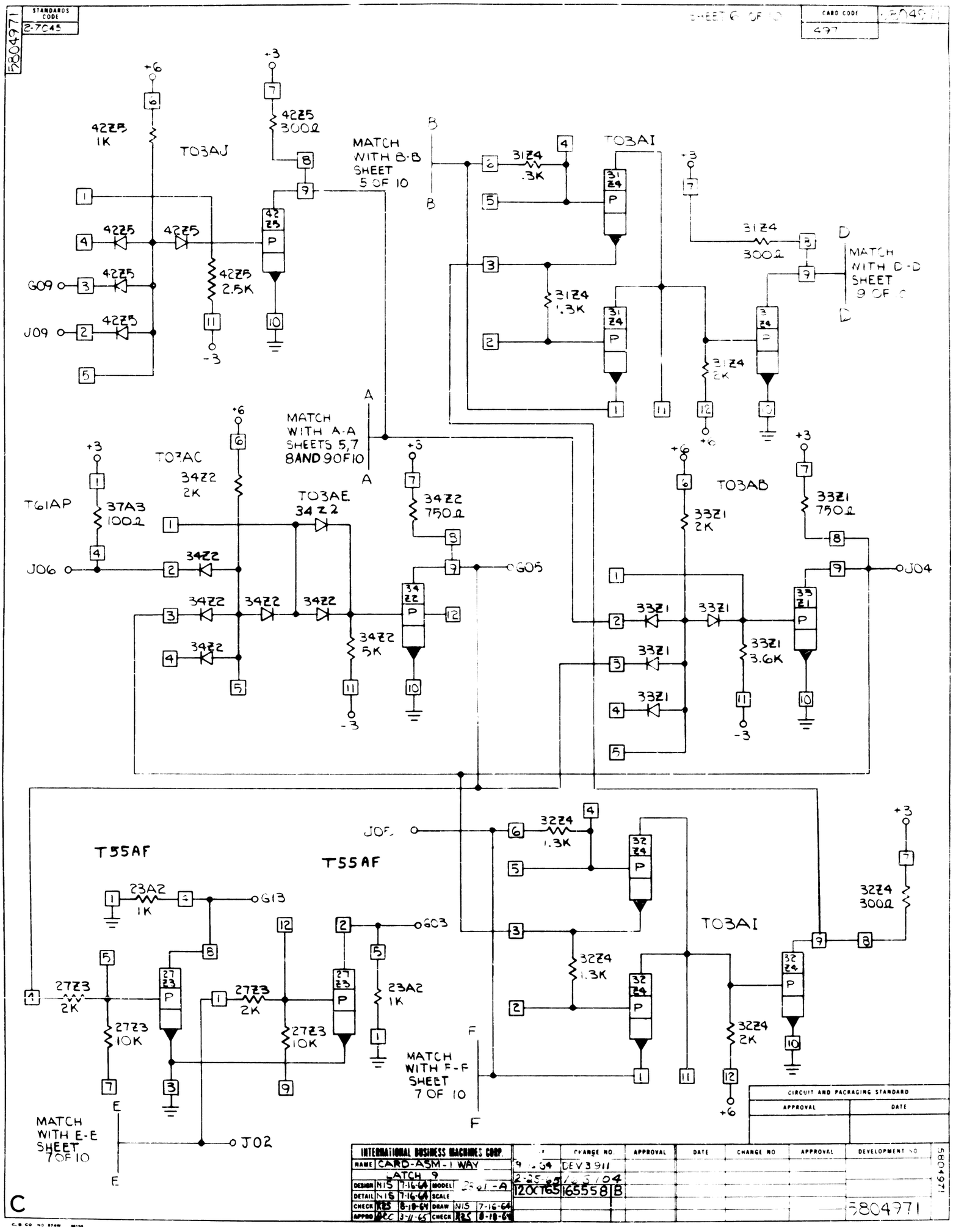
STANDARDS CODE
2-7045
5804971
SHEET 6 OF 10
CARD CODE
497
+6
+3
42Z5
1K
42Z5
300Ω
T03AJ
MATCH WITH B-B SHEET 5 OF 10
B
B
31Z4
.3K
T03AI
31Z4
300Ω
D
D
MATCH WITH D-D SHEET 9 OF 10
42Z5
42Z5
42Z5
42Z5
42Z5
42Z5
2.5K
G09
J09
-3
31Z4
1.3K
31Z4
2K
A
A
MATCH WITH A-A SHEETS 5,7 8 AND 9 OF 10
T03AC
34Z2
2K
T61AP
37A3
100Ω
J06
34Z2
T03AE
34Z2
34Z2
34Z2
34Z2
34Z2
34Z2
5K
-3
34Z2
750Ω
G05
T03AB
33Z1
2K
33Z1
33Z1
33Z1
33Z1
33Z1
3.6K
-3
33Z1
750Ω
J04
T55AF
T55AF
23A2
1K
G13
G03
27Z3
2K
27Z3
10K
27Z3
2K
27Z3
10K
23A2
1K
J02
MATCH WITH E-E SHEET 7 OF 10
E
E
J05
32Z4
1.3K
32Z4
1.3K
T03AI
32Z4
300Ω
32Z4
2K
F
F
MATCH WITH F-F SHEET 7 OF 10
CIRCUIT AND PACKAGING STANDARD
APPROVAL
DATE
INTERNATIONAL BUSINESS MACHINES CORP.
NAME CARD-ASM-1 WAY
CATCH 9
DESIGN N15 7-16-64
MODEL
DETAIL N16 7-16-64
SCALE
CHECK RJS 8-19-64
DRAW N15 7-16-64
APPRO RCC 3-11-65
CHECK RJS 8-19-64
CHANGE NO.
APPROVAL
DATE
CHANGE NO
APPROVAL
DEVELOPMENT NO
DEV 3911
165558 B
5804971
C