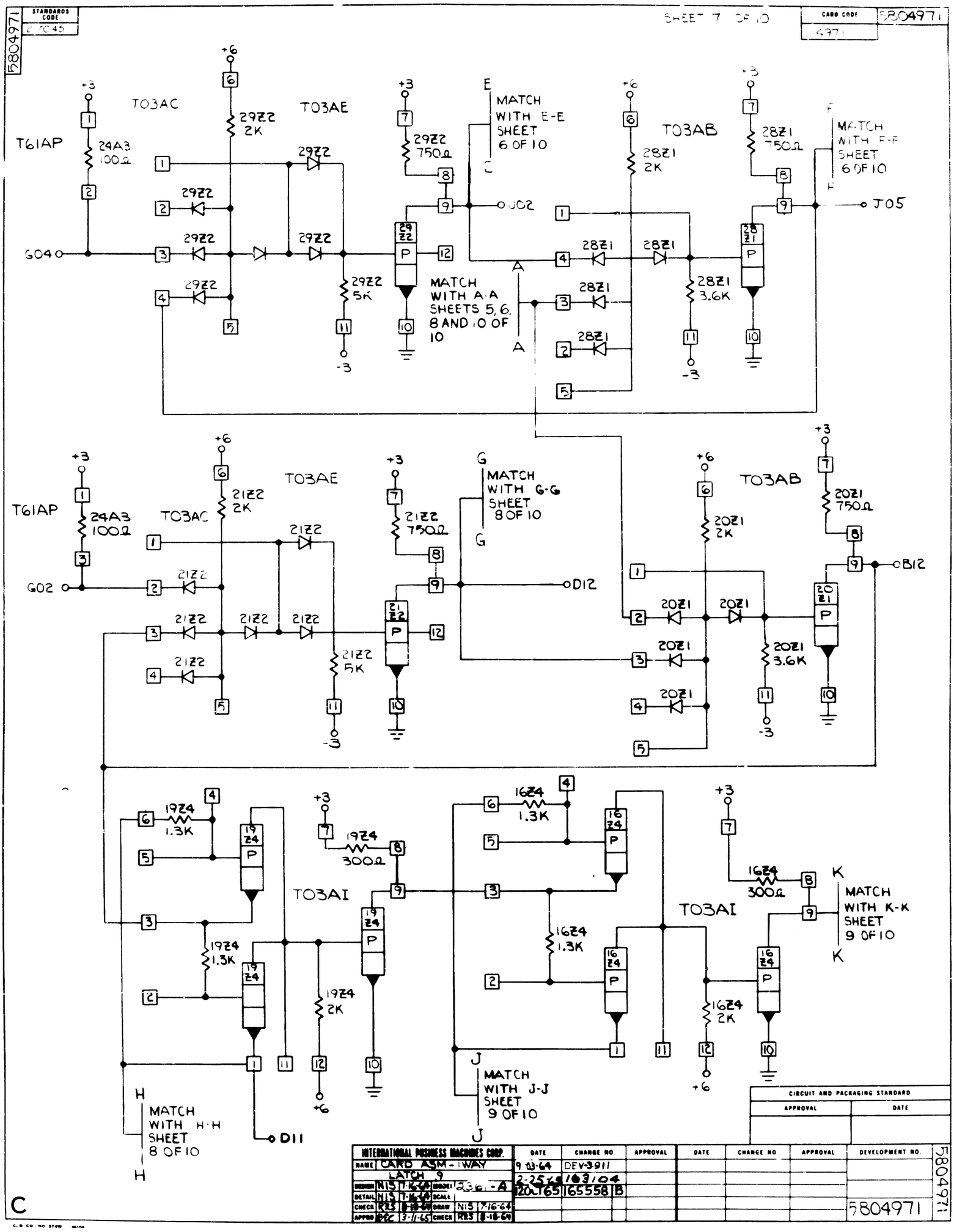
5804971
STANDARDS CODE
SHEET 7 OF 10
CARD CODE
5804971
T61AP
24A3 100Ω
T03AC
29Z2 2K
T03AE
29Z2 750Ω
29Z2 5K
MATCH WITH E-E SHEET 6 OF 10
MATCH WITH A-A SHEETS 5, 6, 8 AND 10 OF 10
T03AB
28Z1 2K
28Z1 750Ω
28Z1 3.6K
MATCH WITH F-F SHEET 6 OF 10
J02
J05
G04
T61AP
24A3 100Ω
T03AC
21Z2 2K
T03AE
21Z2 750Ω
21Z2 5K
MATCH WITH G-G SHEET 8 OF 10
T03AB
20Z1 2K
20Z1 750Ω
20Z1 3.6K
D12
B12
G02
19Z4 1.3K
19Z4 300Ω
19Z4 2K
T03AI
16Z4 1.3K
16Z4 300Ω
16Z4 2K
MATCH WITH K-K SHEET 9 OF 10
MATCH WITH J-J SHEET 9 OF 10
MATCH WITH H-H SHEET 8 OF 10
D11
CIRCUIT AND PACKAGING STANDARD
APPROVAL
DATE
INTERNATIONAL BUSINESS MACHINES CORP.
NAME CARD ASM - 1WAY
LATCH 9
DESIGN N.S. 7-16-64
DETAIL N.S. 7-16-64
CHECK R.R.S. 8-18-64
APPRO. D.P.C. 3-11-65
SCALE
DRAW N.S. 7-16-64
CHECK R.R.S. 8-18-64
DATE
CHANGE NO.
APPROVAL
DEVELOPMENT NO.
9-03-64 DEV-3911
2-25-65 163104
120-165 165558 B
5804971
C