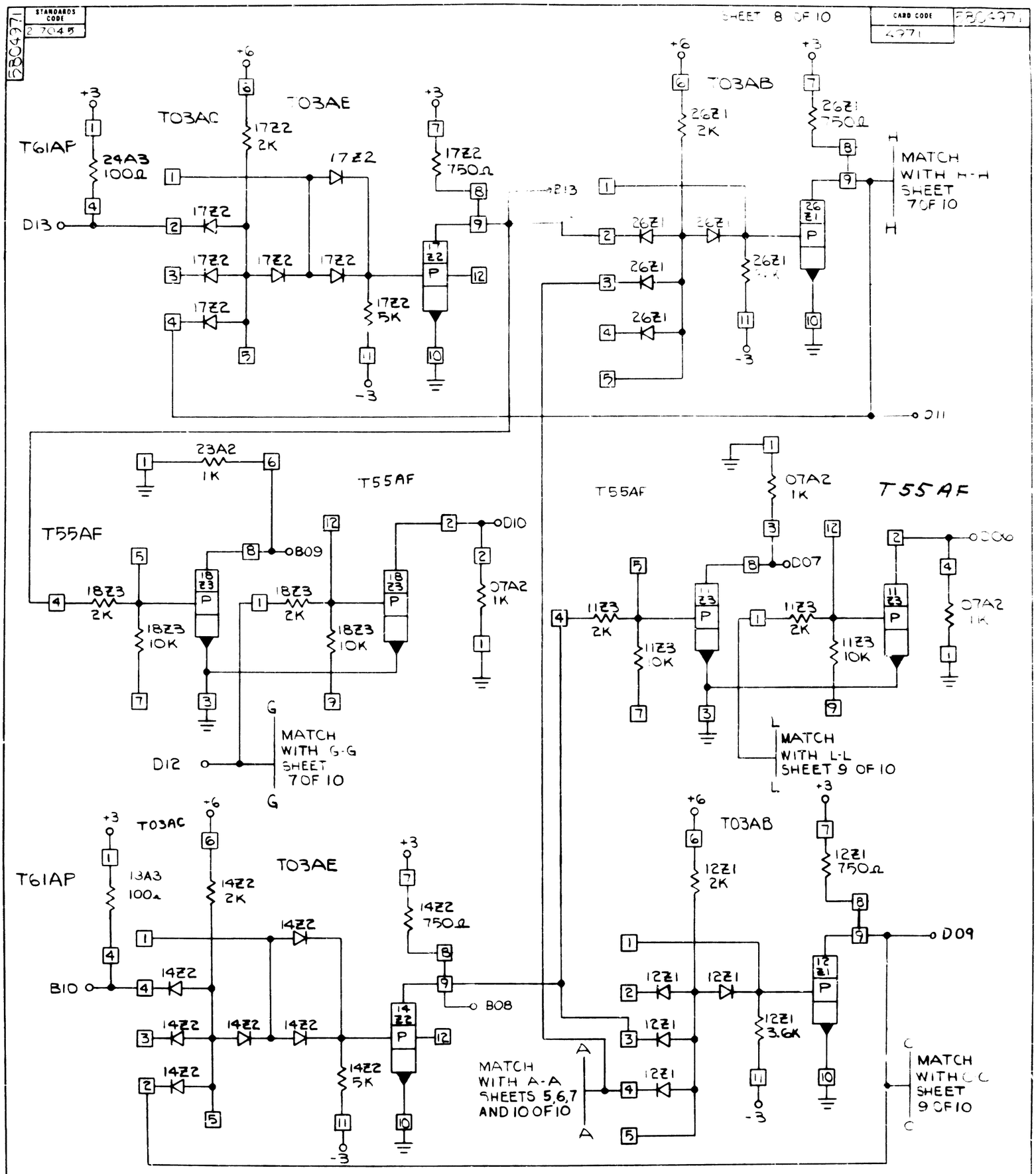
STANDARDS CODE
2 704 B
SHEET 8 OF 10
CARD CODE
4971
T61AF
T03AC
T03AE
T03AB
T55AF
29A3 100Ω
17Z2 2K
17Z2 750Ω
17Z2 5K
26Z1 2K
26Z1 750Ω
MATCH WITH H-H SHEET 7 OF 10
23A2 1K
18Z3 2K
18Z3 10K
07A2 1K
11Z3 2K
11Z3 10K
MATCH WITH G-G SHEET 7 OF 10
MATCH WITH L-L SHEET 9 OF 10
13A3 100Ω
14Z2 2K
14Z2 750Ω
14Z2 5K
12Z1 2K
12Z1 750Ω
12Z1 3.6K
MATCH WITH A-A SHEETS 5,6,7 AND 10 OF 10
MATCH WITH C-C SHEET 9 OF 10
D13
D11
D10
B09
D12
D07
D06
B10
B08
D09
CIRCUIT AND PACKAGING STANDARD
APPROVAL
DATE
INTERNATIONAL BUSINESS MACHINES CORP.
NAME CARD ASM - 1 WAY LATCH 9
DESIGN NIS 7-16-64
DETAIL NIS 7-16-64
CHECK RJS 8-10-64
APPRO DJC 8-11-65
MODEL 8361-A
SCALE
DRAW NIS 7-16-64
CHECK RJS 8-10-64
DATE 9-03-64
CHANGE NO. DEV3971
APPROVAL
DATE 2-25-65
CHANGE NO. 163/04
APPROVAL
DATE 20CT65
CHANGE NO. 165558B
APPROVAL
DEVELOPMENT NO.
5804971
C