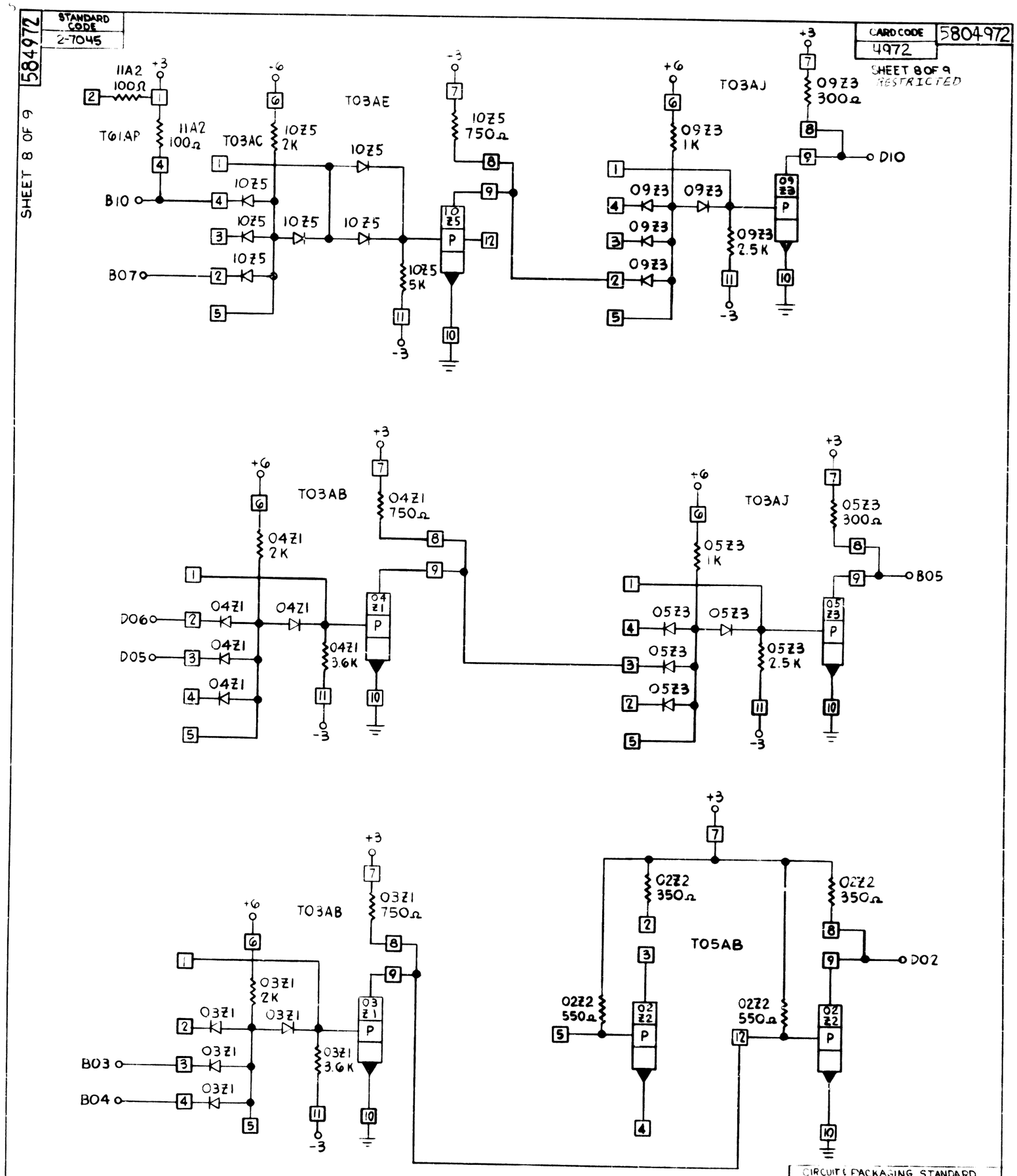

CIRCUIT & PACKAGING STANDARD	
APPROVAL	DATE
N E Bradley	11-12-64

INTERNATIONAL BUSINESS MACHINES CORP.		DATE	CHANGE NO	DATE	CHANGE NO	NOTE	DEVELOPMENT NO.
NAME	CARD ASM - SAR TEST COUNTER CONTROL	11-25-64	162061			PRINT TO ENG. SPEC. NO. 895291	5804972
DESIGN	MER 2-28-64 MODEL 2361-A	10AU665	164952 B				
DETAIL	MER 2-28-64						
CHECK	4-6-64 DRAW GT 3-26-64						
APPRO	4-7-64 CHECK 4-6-64						

5804972