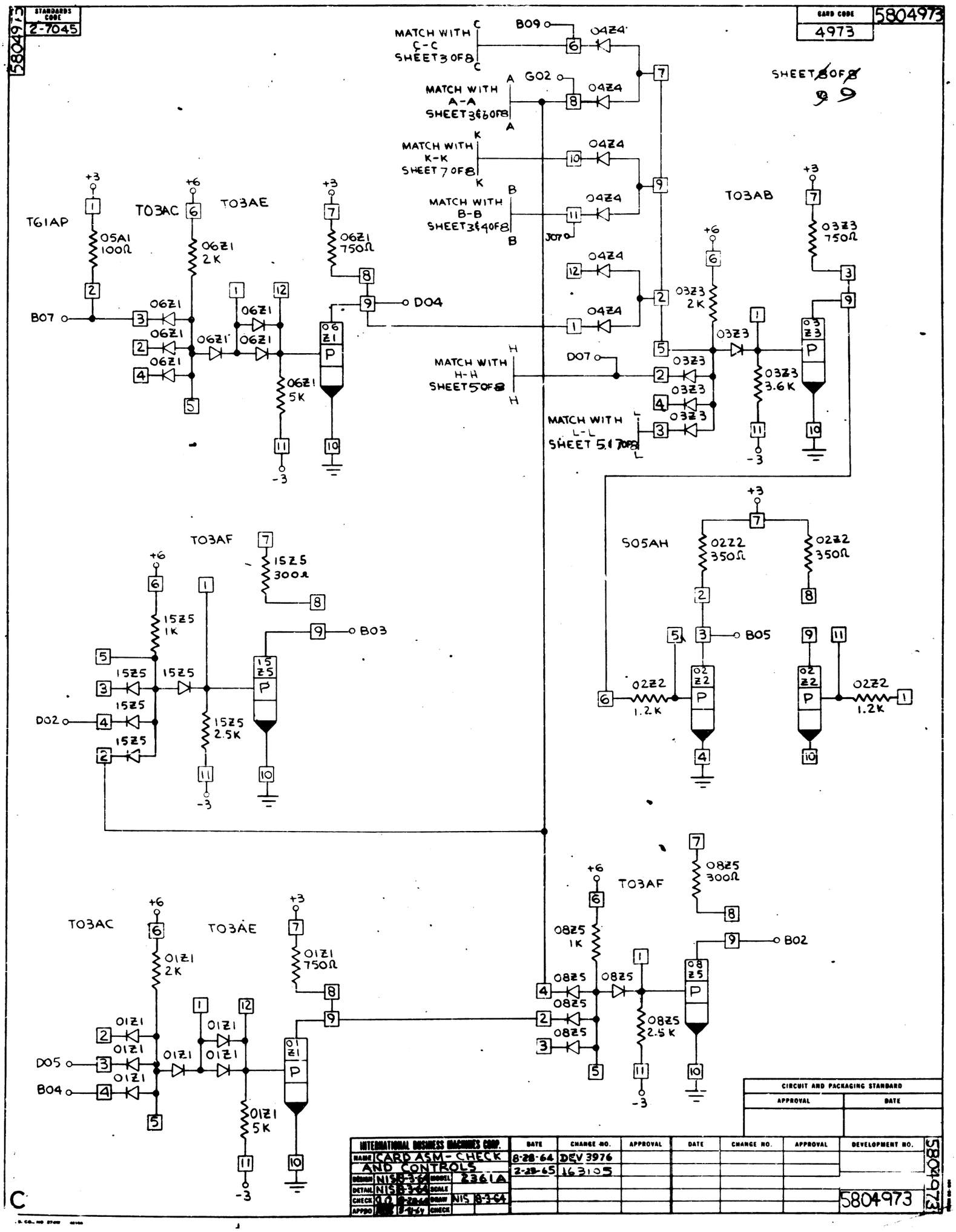
STANDARDS CODE 2-7045
CARD CODE 4973
5804973
SHEET 9 OF 8
MATCH WITH C-C SHEET 3 OF 8
MATCH WITH A-A SHEET 3 & 6 OF 8
MATCH WITH K-K SHEET 7 OF 8
MATCH WITH B-B SHEET 3 & 4 OF 8
MATCH WITH H-H SHEET 5 OF 8
MATCH WITH L-L SHEET 5 & 7 OF 8
B09
G02
J07
D07
D04
B07
T61AP
T03AC
T03AE
T03AB
T03AF
S05AH
B03
D02
B05
B02
D05
B04
05A1 100Ω
06Z1 2K
06Z1 750Ω
06Z1 5K
03Z3 750Ω
03Z3 2K
03Z3 3.6K
15Z5 300Ω
15Z5 1K
15Z5 2.5K
02Z2 350Ω
02Z2 1.2K
08Z5 300Ω
08Z5 1K
08Z5 2.5K
01Z1 2K
01Z1 750Ω
01Z1 5K
CIRCUIT AND PACKAGING STANDARD
APPROVAL
DATE
INTERNATIONAL BUSINESS MACHINES CORP.
NAME CARD ASM-CHECK AND CONTROLS
MODEL 2361A
DATE 8-28-64
CHANGE NO. DEV 3976
2-23-65 163105
DEVELOPMENT NO.
5804973