FORM 2-7045-6 (8-63)

STANDARDS CODE	CIRCUIT AND PACKAGING STANDARD		SYM	DATE	CHANGE NO.	TECH APPRO	SYM	DATE	CHANGE NO.	TECH APPRO	DEVELOPMENT NO	Q/M
2-7046				9-2-64	[illegible]							
CARD CODE	APPROVAL	DATE		1-19-65	[illegible]						5804974	
4974	GHM	4-12-65		6-11-65	[illegible]							

SHEET 4 OF 11

RESTRICTED

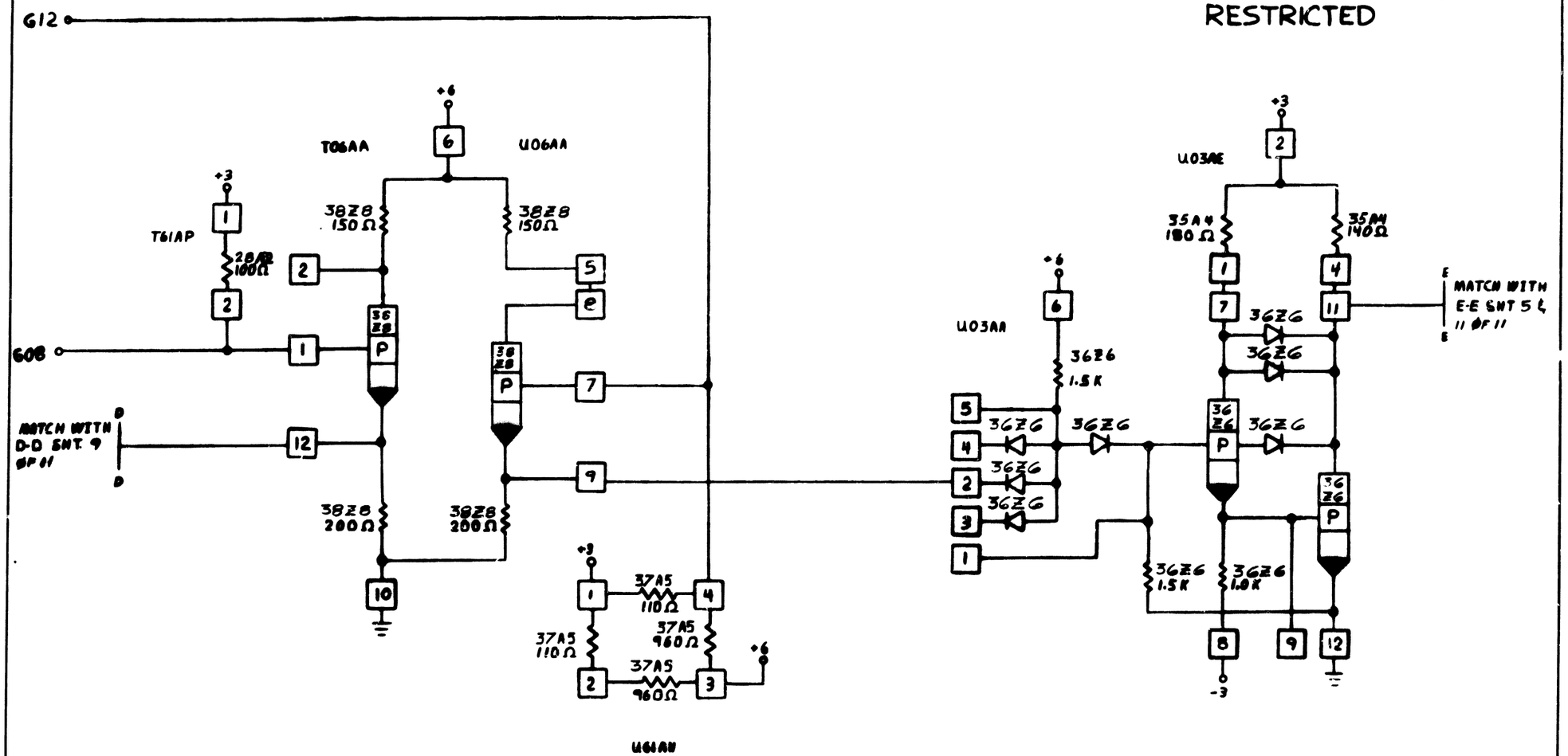

INTERNATIONAL BUSINESS MACHINES CORP				
NAME	CARD ASM-CONTROLS AND INTERFACE			
DESIGN	ADC	4-12-65	TYPE	2361
DETAIL	ADC	4-12-65	SCALE	NONE
CHECK	ADC	4-22-65	DRAW	
APPRO	[illegible]	4-12-65	CHECK	

C 5804974