RESTRICTED

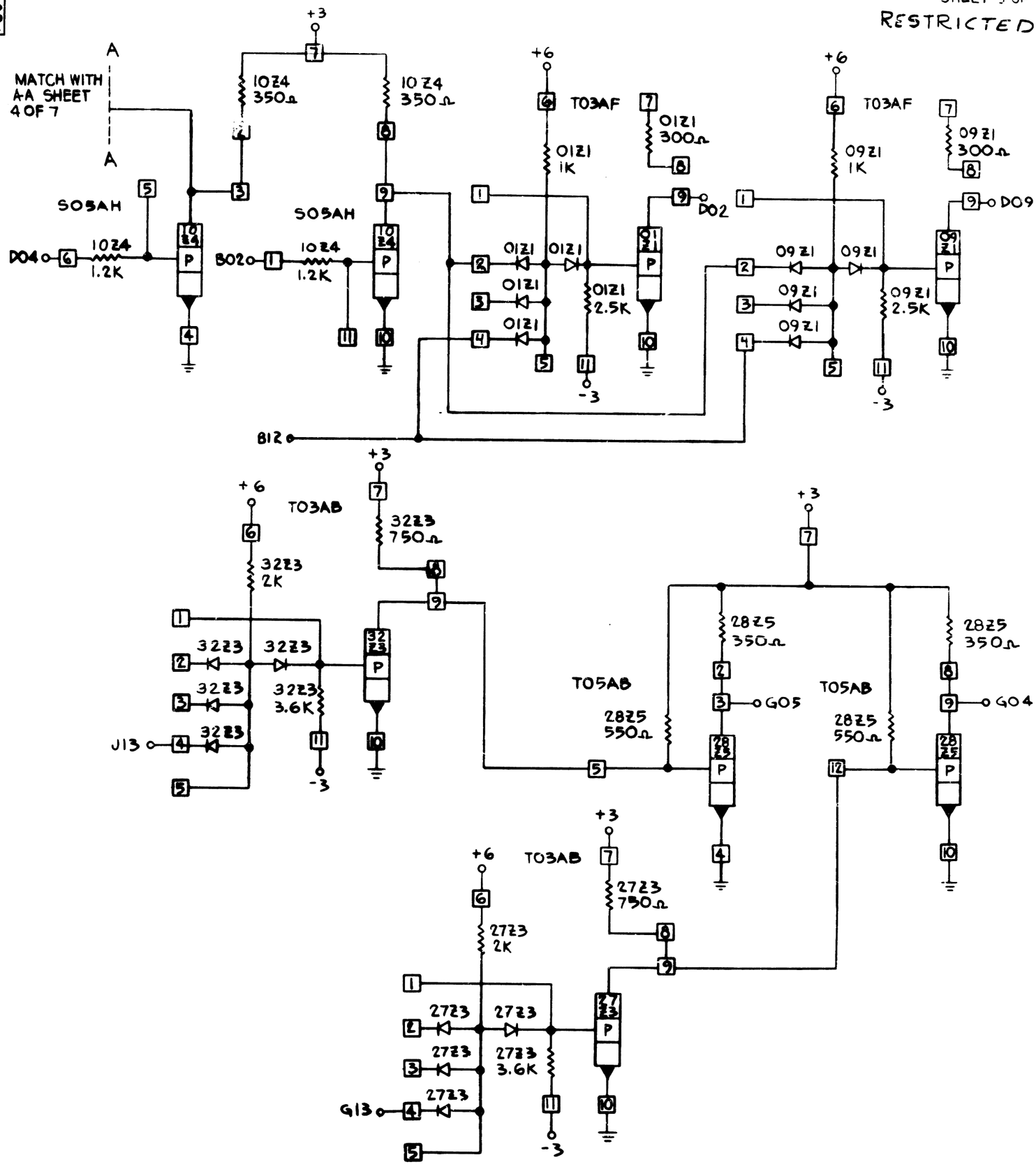

INTERNATIONAL BUSINESS MACHINES CORP.	DATE	CHANGE NO.	DATE	CHANGE NO.	NOTE	DEVELOPMENT NO.
[redacted]	9-8-64	REV 3916			X PRINT TO ENG. SPEC. NO. 895291	
[redacted]	10-23-64	162109				5804975
[redacted]						
[redacted]						

5804975