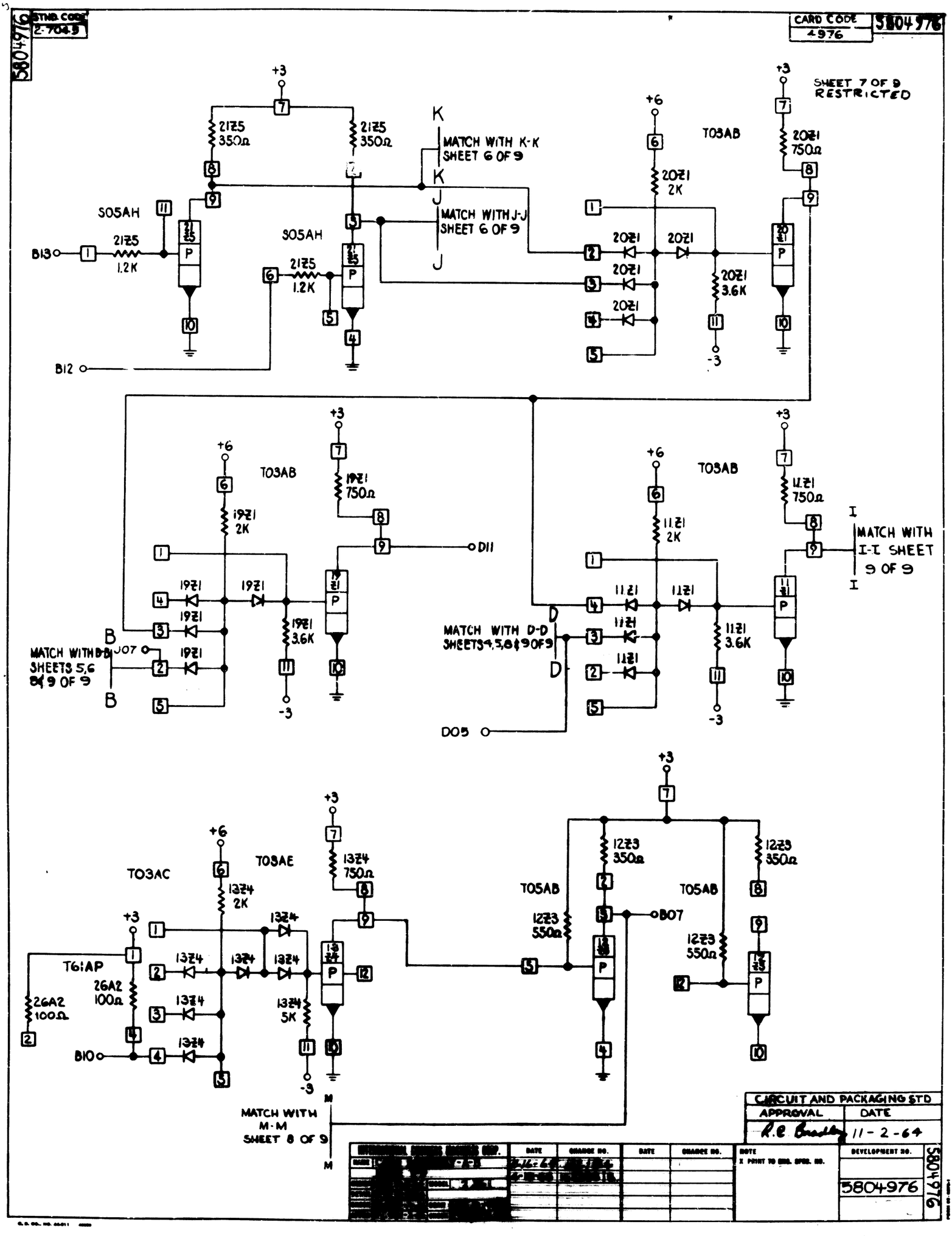
STND CODE 2-704-5
CARD CODE 4976
5804976
SHEET 7 OF 9
RESTRICTED
+3
+6
-3
T03AB
T03AC
T03AE
T05AB
S05AH
T61AP
2175 350Ω
2175 1.2K
2175 750Ω
2021 2K
2021 750Ω
2021 3.6K
1921 2K
1921 750Ω
1921 3.6K
1121 2K
1121 750Ω
1121 3.6K
1324 2K
1324 750Ω
1324 5K
2623 350Ω
2623 550Ω
2642 100Ω
B13
B12
B10
B07
D11
D05
K
J
B
D
I
M
MATCH WITH K-K SHEET 6 OF 9
MATCH WITH J-J SHEET 6 OF 9
MATCH WITH B-B SHEETS 5,6 & 9 OF 9
MATCH WITH D-D SHEETS 4,5,8 & 9 OF 9
MATCH WITH I-I SHEET 9 OF 9
MATCH WITH M-M SHEET 8 OF 9
CIRCUIT AND PACKAGING STD
APPROVAL
DATE
R.C. Bradley
11-2-64
DATE
CHANGE NO.
NOTE
DEVELOPMENT NO.
5804976