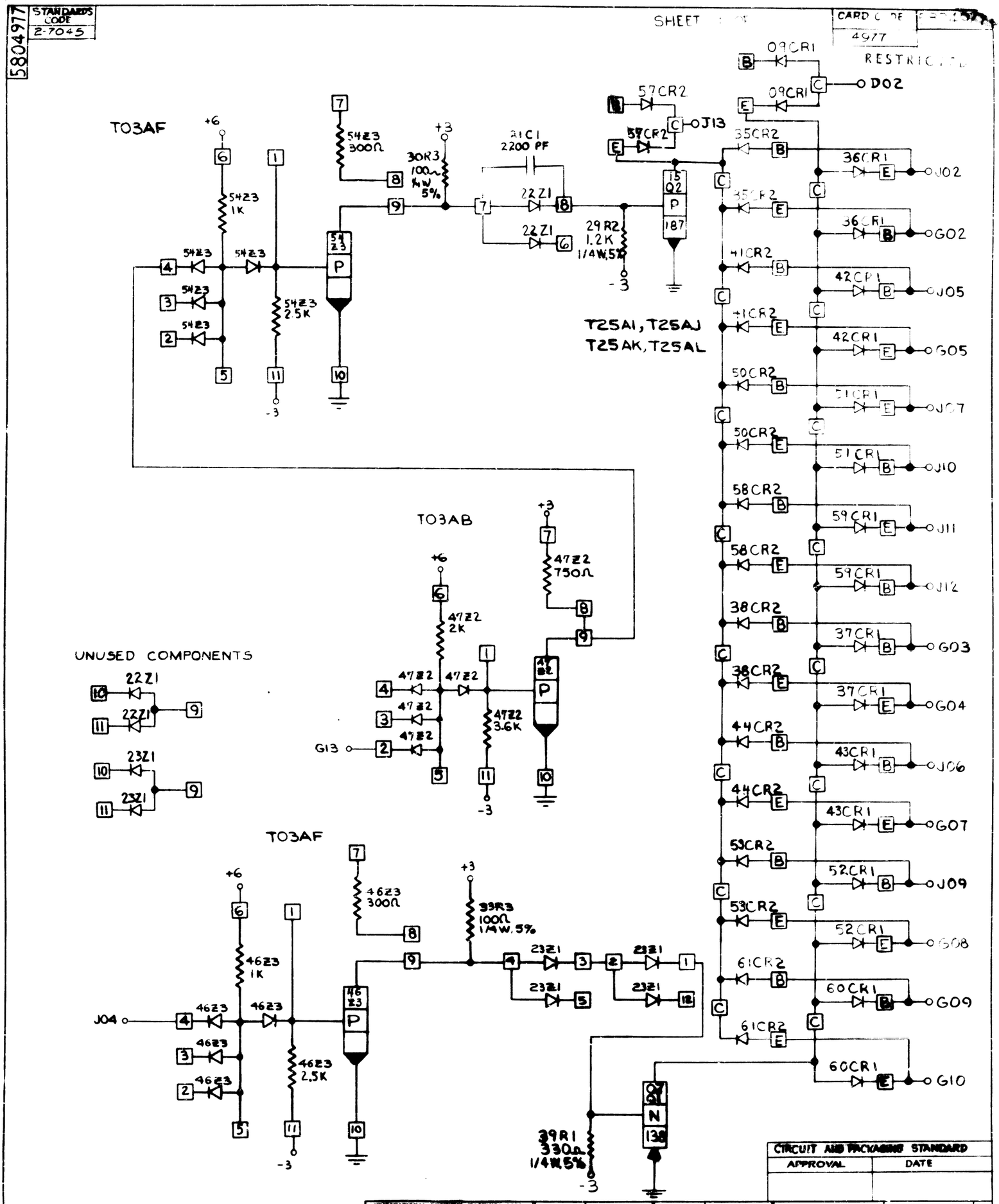
5804977
STANDARDS CODE 2-7045
SHEET
CARD CODE 4977
RESTRICTED
T03AF
T03AB
T03AF
T25A1, T25AJ
T25AK, T25AL
UNUSED COMPONENTS
09CR1
D02
57CR2
J13
35CR2
36CR1
J02
G02
41CR2
42CR1
J05
G05
50CR2
51CR1
J07
J10
58CR2
59CR1
J11
J12
38CR2
37CR1
G03
G04
44CR2
43CR1
J06
G07
53CR2
52CR1
J09
G08
61CR2
60CR1
G09
G10
54Z3 300Ω
30R3 100Ω 1/4W 5%
21C1 2200 PF
22Z1
29R2 1.2K 1/4W 5%
54Z3 1K
54Z3 2.5K
47Z2 750Ω
47Z2 2K
47Z2 3.6K
G13
46Z3 300Ω
33R3 100Ω 1/4W 5%
23Z1
46Z3 1K
46Z3 2.5K
J04
39R1 330Ω 1/4W 5%
CIRCUIT AND PACKAGING STANDARD
APPROVAL
DATE
DATE
CHANGE NO.
DEVELOPMENT NO.
5804977