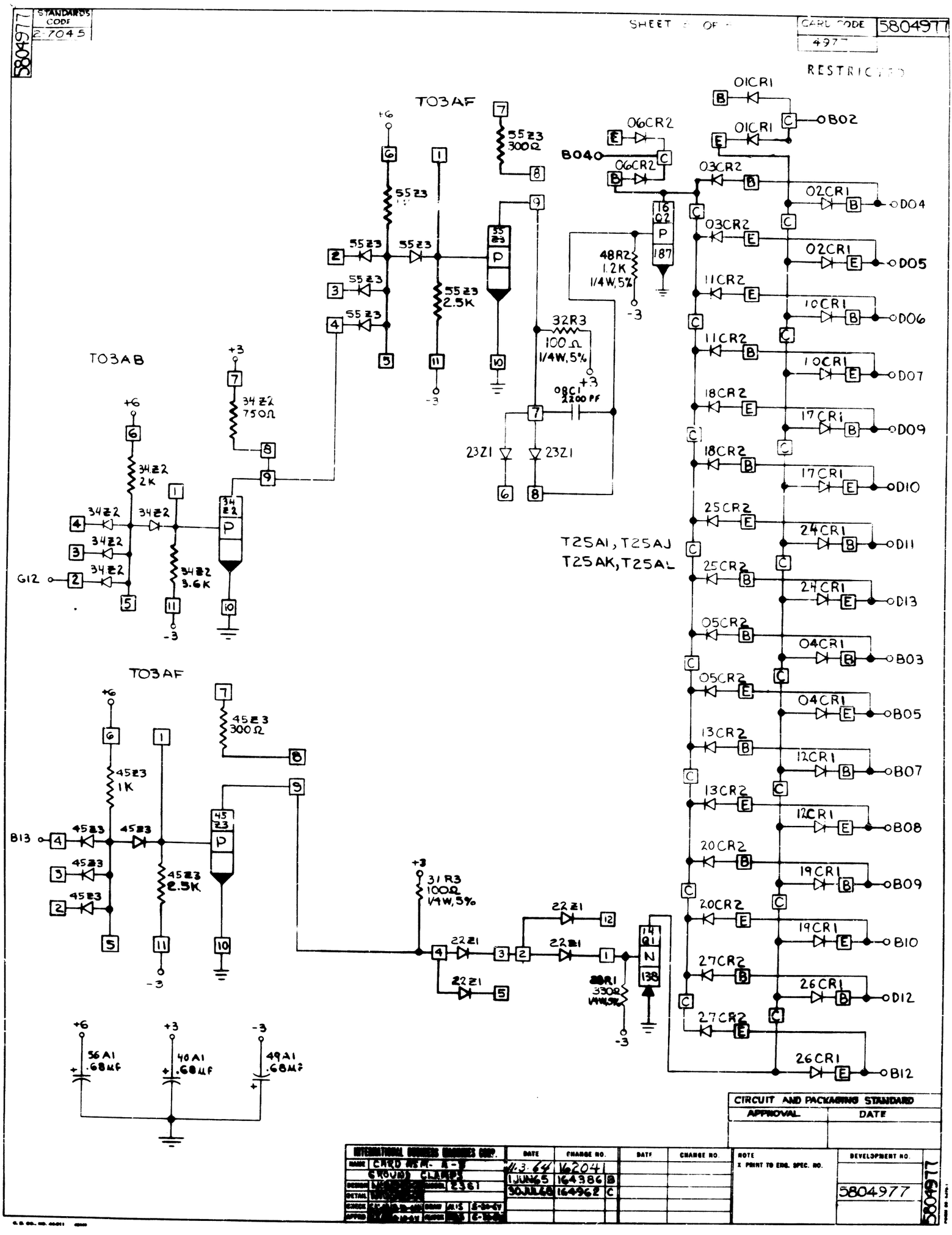
5804977
STANDARDS CODE 2.7045
SHEET OF
CARD CODE 4977
5804977
RESTRICTED
T03AF
55Z3 300Ω
55Z3
55Z3
55Z3
55Z3
55Z3 2.5K
32R3 100Ω 1/4W,5%
08C1 2200 PF
23Z1
23Z1
48R2 1.2K 1/4W,5%
16 Q2 P 187
T03AB
34Z2 750Ω
34Z2 2K
34Z2
34Z2
34Z2
34Z2
34Z2 3.6K
G12
T03AF
45Z3 300Ω
45Z3 1K
45Z3
45Z3
45Z3
45Z3
45Z3 2.5K
B13
31R3 100Ω 1/4W,5%
22Z1
22Z1
22Z1
22Z1
30R1 330Ω 1/4W,5%
14 Q1 N 138
T25AI, T25AJ
T25AK, T25AL
01CR1
06CR2
06CR2
01CR1
B02
B04
03CR2
02CR1
D04
03CR2
02CR1
D05
11CR2
10CR1
D06
11CR2
10CR1
D07
18CR2
17CR1
D09
18CR2
17CR1
D10
25CR2
24CR1
D11
25CR2
24CR1
D13
05CR2
04CR1
B03
05CR2
04CR1
B05
13CR2
12CR1
B07
13CR2
12CR1
B08
20CR2
19CR1
B09
20CR2
19CR1
B10
27CR2
26CR1
D12
27CR2
26CR1
B12
56A1 .68μF
40A1 .68μF
49A1 .68μF
CIRCUIT AND PACKAGING STANDARD
APPROVAL
DATE
INTERNATIONAL BUSINESS MACHINES CORP.
NAME CARD ASM- A-
GROUND CLAMPS
DATE
CHANGE NO.
11-3-64 162041
1 JUN 65 164386 B
30 JUL 68 164962 C
NOTE
X PRINT TO ENG. SPEC. NO.
DEVELOPMENT NO.
5804977