5804981

STD CODE 2-7045

CARD CODE 5804981 / 4981

RESTRICTED

SHEET 4 OF 5

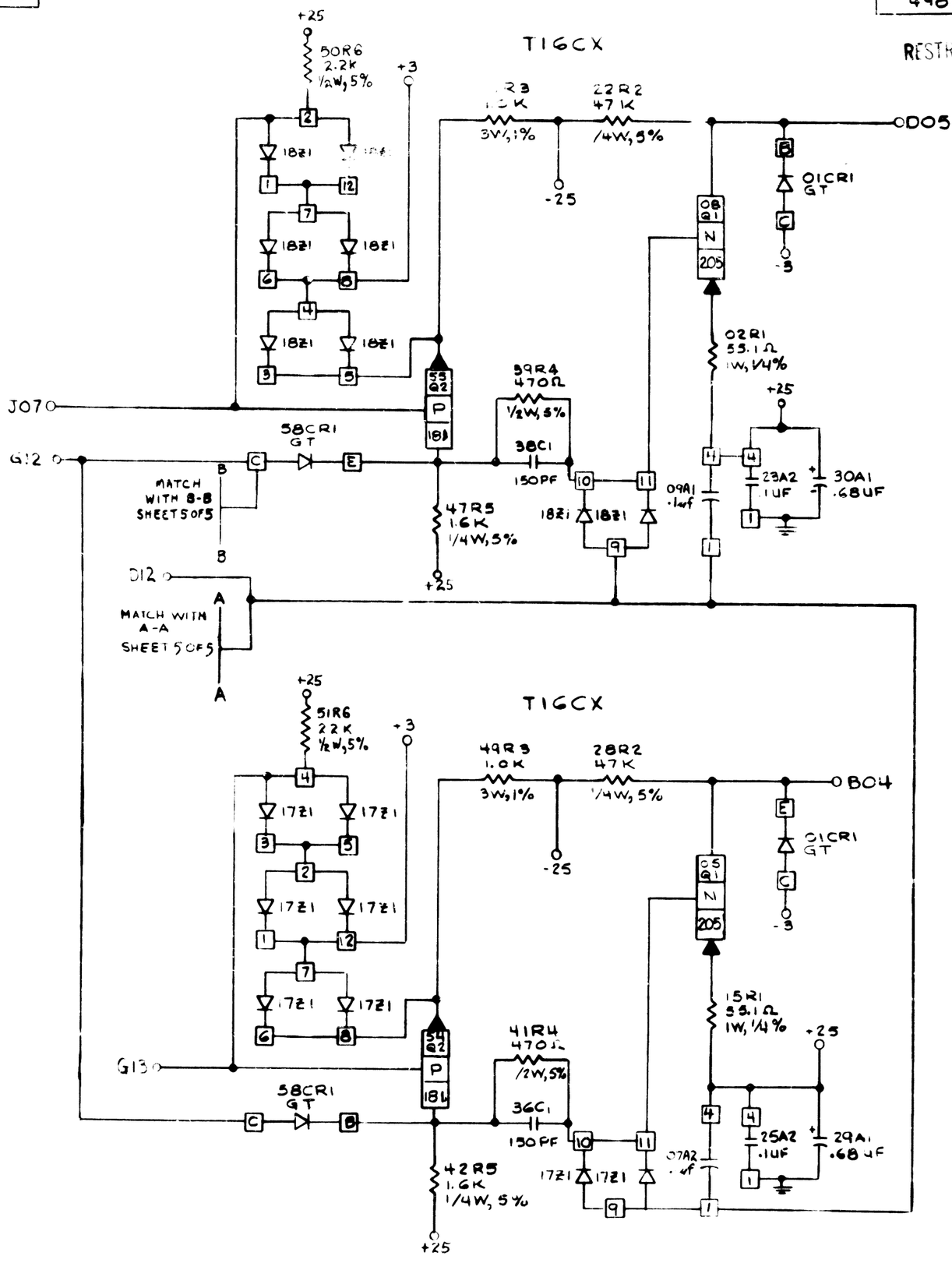

NOTE:
D08 - J08 ARE BUSSED

CIRCUIT AND PACKAGING STANDARD
APPROVAL | DATE

INTERNATIONAL BUSINESS MACHINES CORP.						DATE	CHANGE NO.		DATE	CHANGE NO	NOTE	DEVELOPMENT NO
NAME	CARD ASM-B GROUP					5-2-65	162056	A			X PRINT TO ENG. SPEC. NO.	
ANL CONVERTER						26JUL66	164930	B				
DESIGN	NIS	11-7-64	MODEL	1-36-1 A		28SEP65	164972	C				
DETAIL	NIS	11-7-64				4JAN66	166197	D				5804981
CHECK	RZS	3-64	DRAW	NIS	11-7-64							
APPRO			CHECK	RZS	3-64							

5804981