5804981

STD CODE 2-7045

CARD CODE 4981

SHEET 5 OF 5

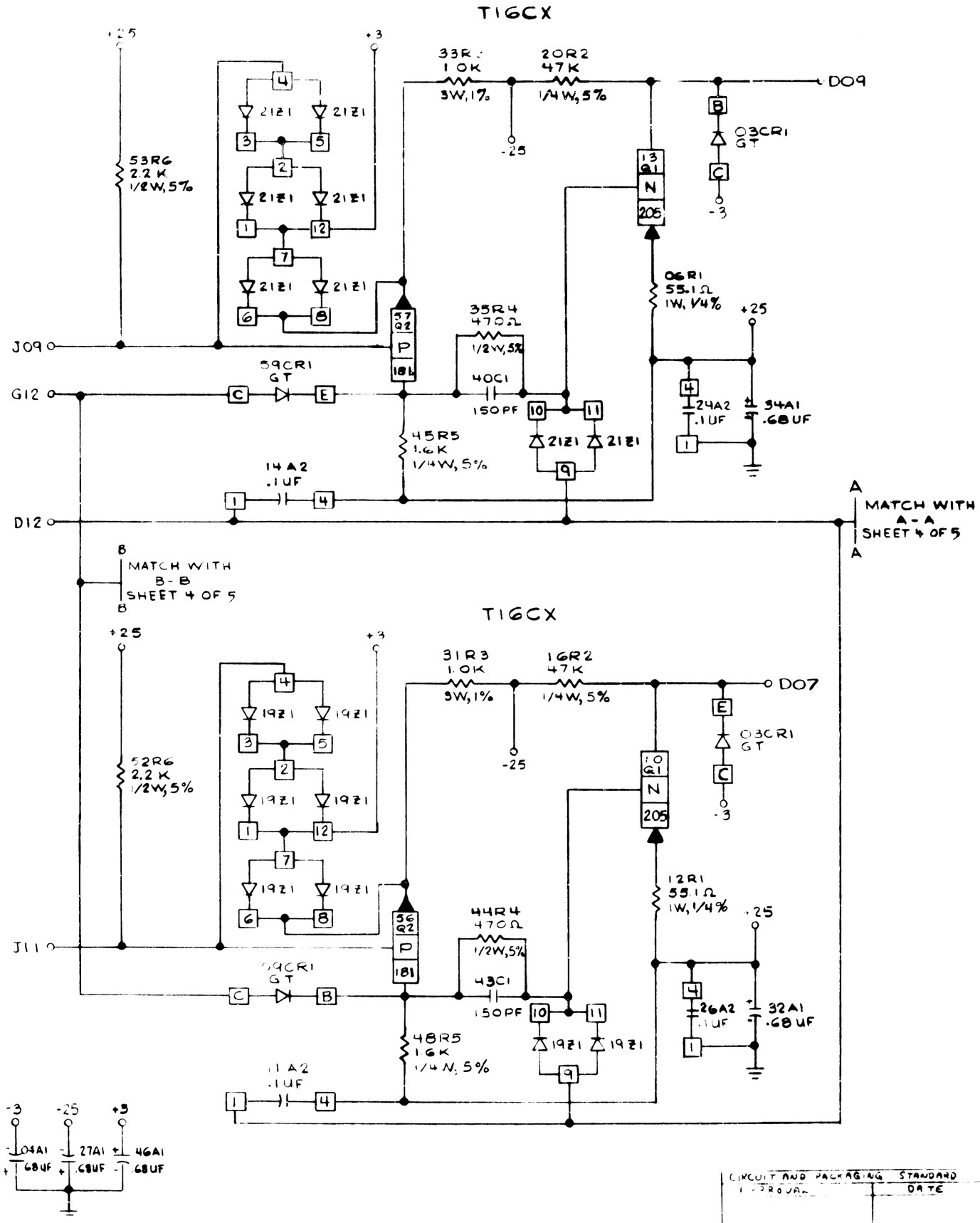

CIRCUIT AND PACKAGING STANDARD
I-PROVAL DATE

| INTERNATIONAL BUSINESS MACHINES CORP. | | |