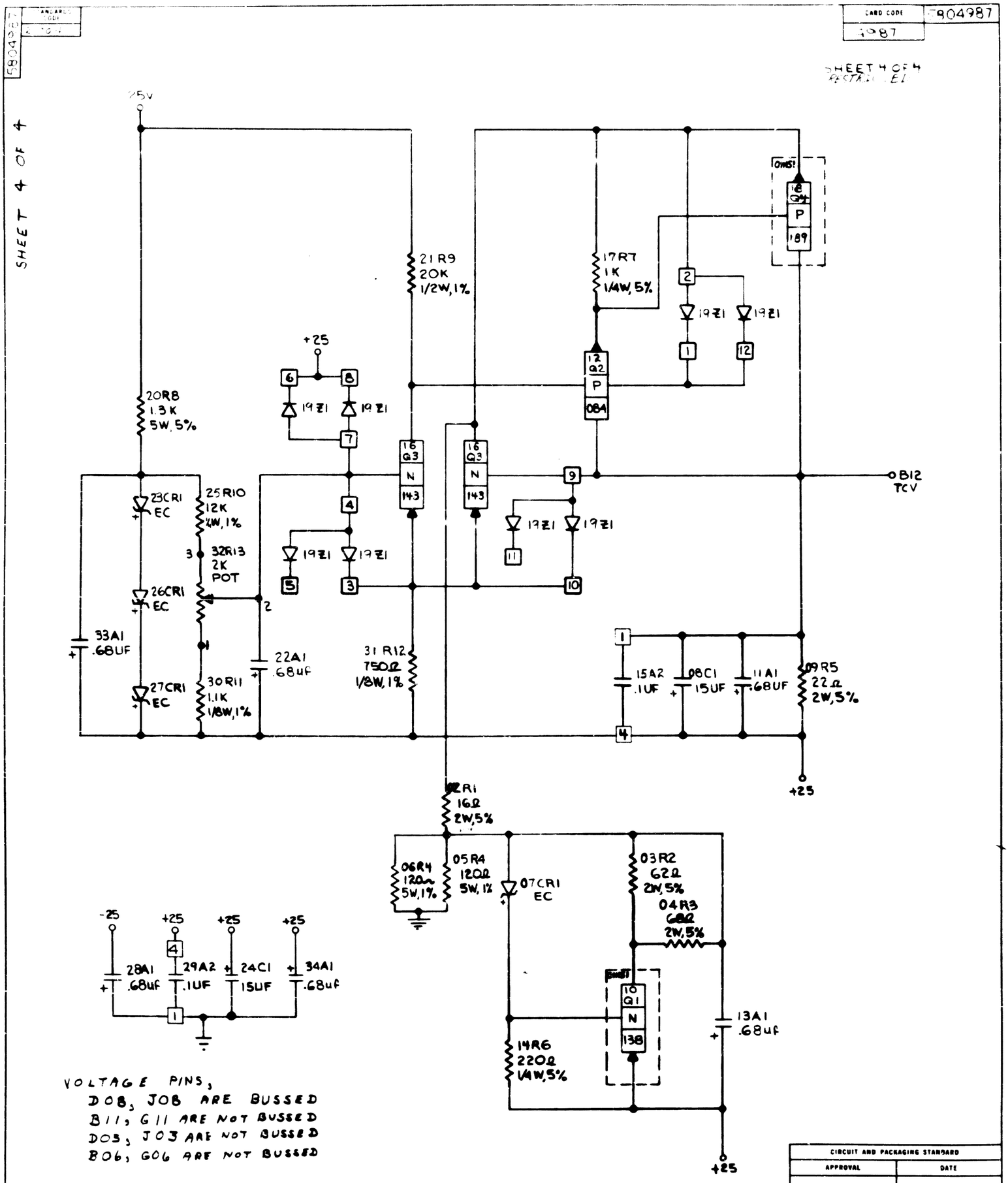
CARD CODE
5804987
SHEET 4 OF 4
+25V
21R9
20K
1/2W,1%
17R7
1K
1/4W,5%
20R8
1.3K
5W,5%
23CR1
EC
25R10
12K
1/4W,1%
32R13
2K
POT
26CR1
EC
33A1
.68UF
27CR1
EC
30R11
1.1K
1/8W,1%
22A1
.68UF
31R12
750Ω
1/8W,1%
19Z1
B12
TCV
15A2
.1UF
08C1
15UF
11A1
.68UF
09R5
22Ω
2W,5%
+25
02R1
16Ω
2W,5%
06R4
120Ω
5W,1%
05R4
120Ω
5W,1%
07CR1
EC
03R2
62Ω
2W,5%
04R3
68Ω
2W,5%
13A1
.68uf
14R6
220Ω
1/4W,5%
-25
28A1
.68uf
29A2
.1UF
24C1
15UF
34A1
.68uf
VOLTAGE PINS,
D08, J08 ARE BUSSED
B11, G11 ARE NOT BUSSED
D03, J03 ARE NOT BUSSED
B06, G06 ARE NOT BUSSED
CIRCUIT AND PACKAGING STANDARD
APPROVAL
DATE
INTERNATIONAL BUSINESS MACHINES CORP.
CARD ASM-B
REFERENCE CLAMP
2361
NONE
DATE
CHANGE NO.
APPROVAL
DATE
CHANGE NO
APPROVAL
DEVELOPMENT NO.
S110038
5804987
C