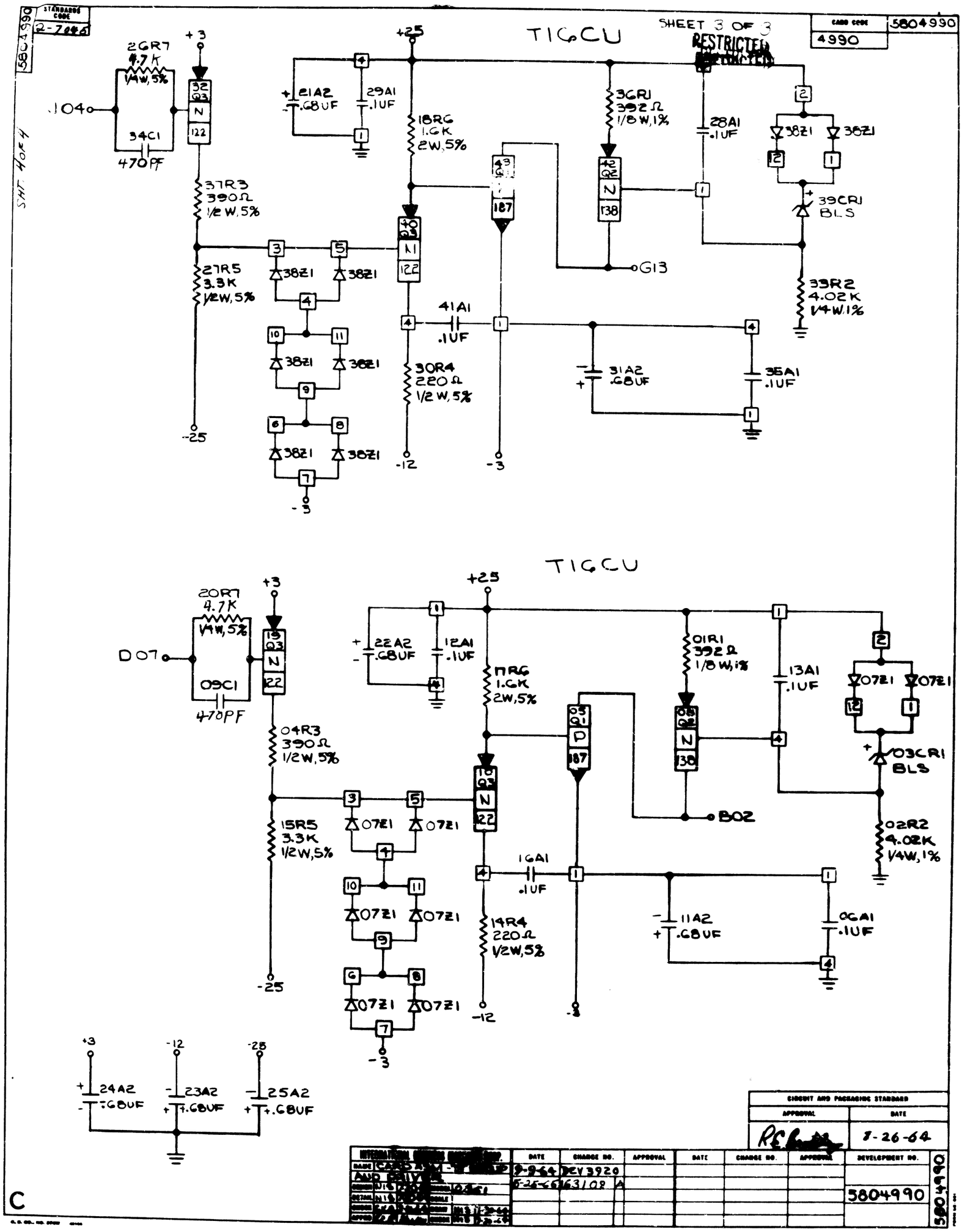
TIGCU
SHEET 3 OF 3
RESTRICTED
CARD CODE 5804990
4990
5804990
STANDARD CODE
2-7044
SHT 4 OF 4
+3
+25
20R7
4.7K
1/4W,5%
.104
34C1
470PF
32 Q3
N
122
21A2
.6BUF
29A1
.1UF
18RG
1.6K
2W,5%
36R1
392Ω
1/8W,1%
28A1
.1UF
38Z1
39CR1
BLS
37R3
390Ω
1/2W,5%
40 Q3
N
122
43 Q3
187
42 Q2
N
138
G13
27R5
3.3K
1/2W,5%
41A1
.1UF
33R2
4.02K
1/4W,1%
30R4
220Ω
1/2W,5%
31A2
.6BUF
35A1
.1UF
-25
-12
-3
TIGCU
+25
+3
20R7
4.7K
1/4W,5%
D07
09C1
470PF
15 Q3
N
122
22A2
.6BUF
12A1
.1UF
11RG
1.6K
2W,5%
01R1
392Ω
1/8W,1%
13A1
.1UF
07Z1
03CR1
BLS
04R3
390Ω
1/2W,5%
05 Q1
P
187
05 Q2
N
138
B02
10 Q3
N
22
15R5
3.3K
1/2W,5%
16A1
.1UF
02R2
4.02K
1/4W,1%
19R4
220Ω
1/2W,5%
11A2
.6BUF
06A1
.1UF
-25
-12
-3
+3
-12
-25
24A2
.6BUF
23A2
.6BUF
25A2
.6BUF
CIRCUIT AND PACKAGING STANDARD
APPROVAL
DATE
8-26-64
DATE
CHANGE NO.
APPROVAL
DEVELOPMENT NO.
9-9-64
DEV 3920
5-26-66
63108 A
5804990
C